ST5484E Seismic Velocity 4-20 mA Transmitter

Datasheet

OVERVIEW

The ST5484E is a self-contained seismic velocity transmitter that incorporates a piezoelectric accelerometer, signal integrator, RMS peak detector, and a 4-20 mA signal conditioner into a single package. It can be mounted directly on a machine case or bearing housing without intervening signal conditioning equipment. The amplitude of the integrated acceleration (velocity) signal is converted to a proportional 4-20 mA signal compatible with industrial process control instrumentation such as PLCs, DCSs, and SCADA systems that can provide trending and/or alarming capabilities for a simplified vibration monitoring strategy.

When the flying lead or terminal block connector options are chosen, the transmitter does not need a separate environmental housing and can directly accept conduit. To reduce installed cost, it can be used with barriers for intrinsically safe installations, or wired directly to explosion-proof conduit fittings for explosion-proof, or with increased safety installations.

Need A Local Display?

When continuous, local indication of vibration levels is required at the transmitter, the Metrix ST5491E provides these capabilities. Its sensing and transmitter elements are similar to the ST5484E, but it includes a convenient 2½ digit LCD display in an integral conduit elbow and is rated for use in temperatures from -10°C to +70°C. Refer to Metrix datasheet 1004598 for ordering information and detailed specifications.

Flying Leads
(Option D=0, 1, 5, or 6) (2-wire shown; 4-wire also available)

2-Pin Terminal Block
(Option D=2)

4-Pin Terminal Block
(Option D=3)

2-Pin MIL Connector
(Option D=4)

Explosion Proof or Increased Safety Versions with Option D≠4

Note: Units sold with an explosion proof rating will include a conduit elbow:
8200-000-IEC for ATEX/UKEX/IECEx/INMETRO/KOSHA/NEPSI
8200-000 for NRTL
8200 Stainless Steel Elbow NRTL/ATEX/UKEX/IECEx
Note: Increased safety with option D=4 does not require an elbow.

APPLICATIONS

A vibration transmitter may be appropriate in applications where a stand-alone monitoring system may not be warranted.

The ST5484E handles general-purpose vibration measurements on a wide range of rotating and reciprocating machinery with rotative speeds between 120- and 6,000-rpm. Seismic measurements are suitable for machines with rolling-element bearings because shaft vibration in such machines is usually transmitted directly through the bearing to the bearing housing without substantial damping or attenuation. Seismic transducers can also measure vibration that does not originate at the shaft, such as bearing-related wear and defects, footing/foundation problems, piping resonances that are coupled to the machine, etc.

Why Measure Velocity?

Acceleration and displacement levels are heavily influenced by the frequencies at which the vibration is occurring, while velocity levels are much less influenced. Thus, although acceleration, velocity, and displacement measurements are inter-related mathematically, seismic velocity measurements tend to be more consistent over a wide range of frequencies than either displacement or acceleration. Consequently, broadband (sometimes called "overall" or "unfiltered") velocity measurements are appropriate for monitoring many machines as a reliable indicator of damaging vibratory energy, with the notable exception of machines with fluid-film bearings, which are usually better addressed by shaft-observing proximity probes.

Casing displacement is not a practical measurement to make directly and is typically just an integrated seismic velocity measurement. As such, the primary decision when selecting a seismic sensor will usually be whether to measure casing velocity or casing acceleration. As noted above, casing velocity will often be more appropriate because it tends to be a more reliable indicator of damaging vibratory energy over a broad frequency spectrum for low- to medium-speed machinery.

NOTE: For machines with fluid-film bearings, shaft-observing proximity probes will provide more effective vibration measurements than seismic transducers due to the rotor dynamics of the machine and the attenuation of vibratory energy through a fluid-film boundary. Accordingly, Metrix recommends and provides proximity probes and associated 4-20 mA transmitters or monitoring systems for such applications.

For machines with rolling element bearings and running above 6,000 rpm, and/or where impulsive casing vibration occurs, acceleration may be a better measurement. In such situations, it is recommended that you consult with a Metrix sales professional who can review your application and assist with selection of the proper transducer type and associated transmitter or monitoring system.

FEATURES

- **RFI/EMI Immunity** – Enhanced circuit design and installation techniques can filter out noise from common sources such as handheld radios, see product manual page 11
- **Excellent Moisture Resistance** – The 2-pin MIL connector version is hermetically sealed to provide an IP67-rated enclosure. Flying lead and terminal block versions are fully potted and rated to IP66 when installed with optional IEC conduit elbow
- **Hazardous Area Approvals** – North American (NRTL), Brazilian (INMETRO), European (ATEX & IEC), and United Kingdom (UKEX) approvals available
- **Dynamic Signal Availability** – 2-wire versions provide a 4-20 mA velocity- proportional signal for easy connection to PLCs, DCSs, and other plant control systems. Optional 4-wire versions[1] also provide the raw acceleration signal (100 mV/g) for use with vibration data collectors and analyzers
- **Variety of Connection Options** – Flying leads, terminal block, and MIL-type connectors available
- **Conduit-Ready[2]** – Terminal block and flying lead options have conduit threads on top of sensor. No special housings are required for connection of conduit
- **Rugged, Industrial Design** – Robust construction offers outstanding durability
- **High- and Low-Pass Filter Options** – The ST5484E can be ordered with a wide variety of low- and high-pass filter options to precisely tailor the band over which vibration is measured
- **Polarity-Independent Wiring** – Metrix patented IPT® technology allows loop power to be connected without regard to voltage polarity, reducing field wiring errors and ensuring that the raw acceleration output[1] is not phase inverted
- **Multiple Mounting Options** – Integral and removable mounting stud options available in both metric and English thread sizes; flat base mounting adapters are also available
- **Loop-Powered** – Runs on nominal 24 V_{DC} power supplied by the 4-20 mA current loop
- **Wide Supply Voltage Range** – Accepts loop power voltages from 11 to 29.6 V_{DC} (intrinsically safe) or 30.0 V_{DC} (explosion proof & non-incendive)
- **RMS Amplitude Detection** – Measures Root Mean Square (RMS) vibration amplitude. Options available for True RMS or scaled RMS (RMS x √2) for "derived peak"
- **Numerous Full Scale Ranges** – The full scale ranges provided in option AAA reflect frequently-ordered ranges; however, many others (too numerous to list) are also available. Consult factory for applications requiring other full scale ranges

Notes:

1. Dynamic raw acceleration signal available with 4-wire versions only (ordering options D= 1 and D=3).
2. Metrix recommends flexible (rather than solid) conduit when possible. Solid conduit can introduce preload forces on the sensor and alter of the vibration response of the sensor.

SPECIFICATIONS

All specifications are at +25°C (+77°F) and +24 V_{DC} supply voltage unless otherwise noted.

Inputs	
Supply Voltage (see also note under max loop resistance)	11 – 29.6 V_{DC} (24 V_{DC} nominal) (intrinsically safe); 11 – 30 V_{DC} (24 V_{DC} nominal) (explosion proof and non-incendive); Metrix patented IPT® independent polarity diode bridge circuit allows voltage to be connected without regard to polarity
Circuit-to-Case Isolation	500 Vrms
Outputs	
4-20 mA	Proportional to velocity full scale range (4mA = 0 vibration, 20mA = full scale vibration) With normal voltage < 3.6 mA indicates a sensor fault, or > 21 mA indicates an out of range condition.
Maximum 4-20 mA loop resistance	R_L = 50 x (Vs – 11) Ω where Vs = Supply Voltage at transmitter terminals. NOTE: For every 50 Ω of resistance in the 4-20 mA loop, 1 V_{DC} above the minimum supply voltage (11 V_{DC}) must be available at the transmitter terminals. For example, 12 V_{DC} at the transmitter terminals will allow a 50 Ω loop resistance; 30 V_{DC} at the transmitter terminals will allow a 950 Ω loop resistance. For intrinsically safe applications, the use of a passive zener barrier will incur a voltage drop of approximately 8.1 volts at the barrier, and the loop supply voltage is limited to 26 V_{DC}. Thus, with passive barriers and a 26 V_{DC} supply, the maximum available voltage at the transmitter will be 17.9 V_{DC} and the corresponding maximum loop resistance will be 345 Ω.
Dynamic Signal	100 mV/g (10.2 mV / m/s^2) acceleration, filtered to same frequency band as proportional velocity (see ordering options E & F)

Dynamic Signal Output Impedance	10 kΩ **NOTES:** 1. The dynamic signal output is short-circuit protected by means of a 10 kΩ resistor, resulting in a relatively large output impedance. Many data collectors and analyzers have relatively low input impedances (100 kΩ or less) which will load this dynamic output and attenuate the signal by 10% or more. Refer to Table 1 for the dB and percentage attenuation for various load impedances. 2. Because the ST5484E is a loop-powered device with low operating power, the dynamic signal output requires a buffer amplifier for cable runs in excess of 16 feet (5 meters). Longer cable runs will also introduce distributed cable capacitance that acts as a low-pass filter, attenuating high-frequency signal content. In such situations, consult the factory for assistance selecting an appropriate low-capacitance cable.
Recommended Minimum Load Impedance (Zload) for Dynamic Signal Connection	500 kΩ (see also note 1 above)
Signal Processing	
Frequency Response (+/- 3dB passband)	2 Hz – 1500 Hz (standard) 2 Hz – 2000 Hz (optional)
Optional High-Pass Filter Corner	5, 10, 20, 50, 100, or 200 Hz (must be specified at time of ordering)
High-Pass Roll-Off	12 dB / octave
Optional Low-Pass Filter Corner	230, 250, 350, 450, 500, or 1000 Hz (must be specified at time of ordering)
Low-pass Roll-Off	12 dB / octave
Accuracy	2 Hz (-3dB) to 25Hz (+/-2.5%) 25 Hz to 300 Hz (+/- 2.5%) (1X, 2X machine speed region) 300 Hz to 1000 Hz (+/- 5%) (bearing frequency region) 1000 Hz (+/- 5%) to 1500 Hz (-3dB)
Maximum Full Scale	5.0 in / sec (others by request)
Minimum Full Scale	0.5 in / sec (others by request)
Full Scale Range Units	• in / sec (standard) • mm / sec (available by request)
Amplitude Detection	True RMS detector; full scale may be ordered with True RMS units or scaled RMS (RMS x √2) for "derived peak" measurements See ordering option AAA.

Physical	
Operating Temperature	-40°C to +100°C (-40°F to +212°F)
Weight	0.9 lbs (0.41 kg) (See page 11)
Dimensions	Refer to Figures 2, 3 and 4 on page 11
Sensitive Axis	Same as mounting stud axis
Axis Orientation	Any
Enclosure Material	• 303 stainless steel (standard) • 316 stainless steel (optional)
Enclosure Rating	**MIL-Style Connector (option D=4):** • IP67 and NEMA 4X
	Flying Leads and Terminal Block Connectors (option D≠4): • **IP66** when used with the following conduit elbows: 8200-001-IEC, 8200-003-IEC, 8200-008-IEC, 8200-001, 8200-003, 8200-005, 8200-008, 8200-101, 8200-103, 8200-105, 8200-108 * **NOTE:** IP and NEMA ratings pending; refer to table on page 6.
Connector Types	• Flying Leads (2- and 4-wire) • MIL-C-5015 (2-wire only) • Terminal Block (2- and 4-wire)
Humidity	• 95%, non-condensing (flying lead and terminal block versions) • 100% condensing (MIL-style connector)
Approvals	
CE Mark	• Yes
Hazardous Areas	• NRTL • ATEX • UKEX • IECEx • INMETRO • KOSHA • NEPSI
Recommended IS Barriers	
Passive (Zener Type)	MTL 7787+ or equal
Active (Zener Type)	MTL 7706 or equal
Active (Galvanic Type)	MTL 5541 or equal
ST5484E Entity Parameters	• Vmax: 29.6 V_{DC} (intrinsically safe) • Vmax: 30 V_{DC} (explosion proof and non-incendive) • Imax: 100 mA

ORDERING INFORMATION

A A A - B B C D - E F
ST5484E- □□□-□□□□-□□

AAA				Full Scale Range[1]
	1	2	1	1.0 in/sec (25.4 mm/s) peak[2]
	1	2	2	0.5 in/sec (12.7 mm/s) peak[2]
	1	2	3	2.0 in/sec (50.8 mm/s) peak[2]
	1	2	4	5.0 in/sec (127 mm/s) peak[2]
	1	2	6	0.8 in/sec (20.3 mm/s) peak[2]
	1	3	2	3.0 in/sec (76.2 mm/s) peak[2]
	1	5	1	1.0 in/sec (25.4 mm/s) true RMS
	1	5	2	0.5 in/sec (12.7 mm/s) true RMS
	1	5	3	2.0 in/sec (50.8 mm/s) true RMS
	1	5	4	5.0 in/sec (127 mm/s) true RMS
	1	5	6	0.8 in/sec (20.3 mm/s) true RMS
	1	6	2	3.0 in/sec (76.2 mm/s) true RMS
BB				**Housing Material, Stud Size & Length[1]**
	00			303 SS housing, ¼" NPT stud
	01			303 SS housing, ½" NPT stud
	02			303 SS housing, ⅜ x 24 UNF – ½" stud
	03			303 SS housing, ½ x 20 UNF – ½" stud
	04			303 SS housing, M8 x 1.0 – 12mm stud
	05			303 SS housing, M10 x 1.25 – 12mm stud
	06			303 SS housing, ¼ x 20 UNC – ½" stud
	07			303 SS housing, ¼ x 28 UNF – ½" stud
	08			303 SS housing, M8 x 1.25 – 12mm stud
	09			303 SS housing, ⅜ x 16 UNC – ½" stud
	10			316 SS housing, ¼" NPT stud[8]
	11			316 SS housing, ½" NPT stud[8]
	12			316 SS housing, ⅜ x 24 UNF – ½" stud[8]
	13			316 SS housing, ½ x 20 UNF – ½" stud[8]
	14			316 SS housing, M8 x 1.0 – 12mm stud[8]
	15			316 SS housing, M10 x 1.25 – 12mm stud[8]
	16			316 SS housing, ¼ x 20 UNC – ½" stud[8]
	17			316 SS housing, ¼ x 28 UNF – ½" stud[8]
	18			316 SS housing, M8 x 1.25 – 12mm stud[8]
	19			316 SS housing, ⅜ x 16 UNC – ½" stud[8]
	20			303 SS housing, ½ x 13 UNC – ½" stud
	30			316 SS housing, ½ x 13 UNC – ½" stud[8]
C				**Hazardous Area Certification[3,4,5,7]**
	0			No Hazardous Area Approval[10]
	1			NRTL Class I, Div 2, Grps A-D, T4/T6 (increased safety)
	2			NRTL Class I, Div 1, Grps B-D and Class II, Div 1, Grps E-G, T4/T6 (explosion proof, includes a 8200 conduit elbow)[9]
	3			ATEX/UKEX, Ex ia IIC T4 Ga (intrinsically safe)
	4			NRTL Class I, Div 1, Grps A-D (intrinsically safe)
	5			INMETRO, Ex ia IIC T4 Ga (intrinsically safe)
	6			INMETRO, Ex db IIC T4/T6 Gb (explosion proof, includes 8200 conduit elbow)[9]
	7			ATEX/UKEX/IECEx/KOSHA/ECAS/NEPSI Ex ia IIC T4 Ga (intrinsically safe)[10]
	8			ATEX/UKEX/IECEx/KOSHA/ECAS/NEPSI Ex d IIC T4/T6 Gb (explosion proof, includes 8200 conduit elbow)[9,10]
	9			INMETRO, Ex ec IIC T4/T6 Gc (increased safety, includes 8200 conduit elbow when D≠4)[9]
	B			ATEX/UKEX, Ex ia IIC T4 Ga (intrinsically safe)
	C			ATEX/UKEX, Ex ec IIC T4/T6 Gc (increased safety, includes 8200 conduit elbow when D≠4)[9]
	D			IECEx, Ex ec IIC T4/T6 Gc (increased safety, includes 8200 conduit elbow when D≠4)[9,10]
	E			NRTL, Class 1, DIV 1, GRPS B, C, & D, Class 2, DIV 1, GRPS E, F, &G, T4/T6, elbow with terminals[9]
	F			INMETRO, Ex d IIC, T4/T6 Gb, elbow with terminals (explosion proof)[9]
	G			ATEX/UKEX/IECEx/KOSHA, Ex d IIC, T4/T6 Gb, elbow with terminals (explosion proof)[9,10]
D				**Connection Type[3]**
	0			24" Flying Leads, 2-wire[5]; (4-20 mA output only)
	1			24" Flying Leads, 4-wire[5]; (4-20 mA output and dynamic raw acceleration signal)
	2			Terminal Block, 2-wire[5]; (4-20 mA output only)
	3			Terminal Block, 4-wire[5]; (4-20 mA output and dynamic raw acceleration signal)
	4			2-Pin MIL-Style (MIL-C-5015); (4-20 mA output only)
	5			72" Flying Leads, 2-wire[5]; (4-20 mA output only)
	6			72" Flying Leads, 4-wire[5]; (4-20 mA output and dynamic raw acceleration signal)

E		High-Pass Filter
	0	2 Hz (standard)
	1	5 Hz
	2	10 Hz
	3	20 Hz
	4	50 Hz
	5	100 Hz
	6	200 Hz[6]
	X	Custom (consult factory)[6]
F		**Low-Pass Filter**
	0	1500 Hz (standard)
	1	500 Hz
	2	1000 Hz
	3	2000 Hz
	4	250 Hz[6]
	5	230 Hz[6]
	6	350 Hz[6]
	7	450 Hz
	X	Custom (consult factory)[6]

Table 1 – Attenuation of Dynamic Signal versus Load Impedance (Z_{load})

Data Collector / Analyzer Load Impedance (Z_{load})	Dynamic Signal Voltage Attenuation (dB)	Dynamic Signal Voltage Attenuation (%)
10 MΩ	0.01 dB	0.1%
5 MΩ	0.02 dB	0.2%
2 MΩ	0.04 dB	0.5%
1 MΩ	0.09 dB	1%
500 kΩ	0.18 dB	2%
200 kΩ	0.43 dB	5%
100 kΩ	0.84 dB	9%
50 kΩ	1.61 dB	17%
20 kΩ	3.57 dB	33%
10 kΩ	6.10 dB	50%

Table 2 – Allowable Combinations for AAA & BB Options

Full Scale Range AAA =	Allowable BB options (Mounting Stud Sizes)
121, 122, 123, 126, 151, 152, 153, 156	All (no restrictions)
124 and 154	00, 01, 03, 10, 11, 13
132 and 162	00, 01, 02, 03, 05, 09, 10, 11, 12, 13, 15, 19

NOTES:

1. Smaller-diameter mounting studs are not able to withstand sustained ambient vibration levels above 2.0 in/sec. Consult Table 2 for allowable combinations of A and B options.
2. The ST5484E uses an RMS amplitude detection circuit. Full scale ranges in peak units use scaled RMS (i.e., RMS x √2). The "derived peak" measurements will equal true peak only under the special case of a pure sinusoid, not complex vibration signals.
3. Hazardous Area Certifications are not compatible with all connection types. Consult Table 3 for allowable combinations of C & D options.
4. Some approvals require intrinsic safety barriers, others require Explosion-Proof wiring practices. Refer to Table 4.
5. Refer to the Accessories section of this document. Units sold with an explosion proof or increased safety rating will include an 8200-000 IEC or 8200-000 explosion proof elbow that will be affixed at the factory. For increased safety with D=4, elbow is not required.
6. High- and Low-Pass filter corners for standard filters must be separated by at least one octave (low-pass frequency must be at least twice the high-pass frequency). All combinations are allowed except E = 6 and F = 4, 5, or 6. Custom filters with closer separation and/or different roll-offs may be available in some instances. Consult the factory if custom filters are required.
7. For SIL approval, add an "S" prefix to the desired Hazardous Area Certification (Option C).
8. Adding an "L" suffix to the BB option will change the 316 SS to 316L SS.
9. To Order the 303 SS Explosion Proof Elbow add an "X" suffix to the C Option, for the 316L SS Explosion Proof Elbow add a "Y" suffix to the C Option. Without the X or Y suffix, the default is the Aluminum Elbow.
10. This note only applies to "C" Hazardous Area ordering options on page 4, for options 0, 7, 8, D and G. Only these options can be made in China. To order a ST5484E "Made in China", one must include a "C" suffix to ordering options 0, 7, 8, D and G Hazardous Area Options – for example 8C. The "C" suffix means that the Hazardous Area Rating for Option 7, 8, D and G would provide a "Made in China" label and the following Hazardous Area Ratings:

C		Hazardous Area Options for *Made in China* Transmitters		
	0C	No Hazardous Area Approval	S0C	SIL Approved, No Hazardous Area Approval
	7C	IECEx/NEPSI, Ex ia IIC, T4 Ga (intrinsically safe)	S7C	SIL Approved, IECEx/NEPSI, Ex ia IIC, T4 Ga (intrinsically safe)
	8C	IECEx/NEPSI, Ex d IIC, T4/T6 Gb (explosion proof)	S8C	SIL Approved, IECEx/NEPSI, Ex d IIC, T4/T6 Gb (explosion proof)
	DC	IECEx, Ex ec IIC, T4/T6 Gc (increased safety)	SDC	SIL Approved, IECEx, Ex ec IIC, T4/T6 Gc (increased safety)
	GC	IECEx, Ex d IIC, T4/T6 Gc, elbow w/terminals (explosion proof)	SGC	SIL Approved, IECEx, Ex d IIC, T4/T6 Gb (elbow w/terminals (explosion proof)

Table 3 – Allowable Combinations for C & D Options

D \ C	0	1	2	3	4	5	6	7	8	9	A	B	C	D	E	F	G	H
0	Y	Y	Y	Y	Y	Y	Y	Y	Y	Y	Y	Y	Y	Y	Y	Y	Y	Y
1	Y	Y	Y	Y	Y	Y	Y	Y	Y	Y	Y	Y	Y	Y	Y	Y	Y	Y
2	Y	Y	Y	Y	Y	Y	Y	Y	Y	Y	Y	Y	Y	Y	Y	Y	Y	Y
3	Y	Y	Y	Y	Y	Y	Y	Y	Y	Y	Y	Y	Y	Y	Y	Y	Y	Y
4	Y	Y	N	Y	Y	Y	N	Y	N	Y	N	Y	Y	Y	N	N	N	N
5	Y	Y	Y	Y	Y	Y	Y	Y	Y	Y	Y	Y	Y	Y	Y	Y	Y	Y
6	Y	Y	Y	Y	Y	Y	Y	Y	Y	Y	Y	Y	Y	Y	Y	Y	Y	Y

SAFETY INTEGRITY LEVEL

SIL is a method or measurement unit to determine the reliability of electrical, electronic and programmable systems. The purpose of the SIL certification is to measure safety system performance and the likelihood of failure. Achieving SIL certification, based on the IEC61508 Functional Safety Standard, signifies that the product has been thoroughly assessed and is a reliable electronic device ready to use across a wide range of industries. Metrix products have been thoroughly evaluated by an independent third party agency on the basis of IEC61508 Functional Safety standards to obtain SIL certification.

Table 4 – Approvals and corresponding wiring requirements

C	Agency	Approved Areas	I.S. Barriers Required	Explosion-Proof Wiring Required	I.S Barriers or XP Wiring Not Required	Increased Safety Wiring Required
1	NRTL	Class I, Div 2,Groups A-D, T4/T6 (increased safety)			●	
2	NRTL	Class I, Div 1, Grps B-D and Class II, Div 1, Grps E-G, T4/T6 (explosion proof)		●		
3	ATEX/UKEX	Ex ia IIC T4 Ga (intrinsically safe)	●			
4	NRTL	Class I, Div 1, Groups A-D (intrinsically safe)	●			
5	INMETRO	Ex ia IIC T4 Ga (intrinsically safe)	●			
6	INMETRO	INMETRO, Ex db IIC T4/T6 Gb (explosion proof)		●		
7	ATEX/UKEX/IECEx/ KOSHA/NEPSI	ATEX/UKEX/IECEx/KOSHA/ECAS/NEPSI Ex ia IIC T4 Ga (intrinsically safe)	●			
8	ATEX/UKEX/IECEx/ KOSHA/NEPSI	Ex db IIC T4/T6 Gb (explosion proof)		●		
9	INMETRO	Ex ec IIC T4/T6 Gc (increased safety)				●
B	ATEX/UKEX	Ex ia IIC T4 Ga (intrinsically safe)	●			
C	ATEX/UKEX	Ex ec IIC T4/T6 Gc (increased safety)				●
D	IECEx	Ex ec IIC T4 Tc (increased safety)				●
E	NRTL	Class 1, DIV 1, GRPS B, C, & D, Class II, DIV 1, GRPS E, F, &G, T4/T6, elbow with terminals		●		
F	INMETRO	Ex db IIC, T4/T6 Gb, elbow with terminals (explosion proof)		●		
G	ATEX/UKEX/IECEx/ KOSHA	Ex db IIC, T4/T6 Gb, elbow with terminals (explosion proof)		●		

ACCESSORIES - ELBOWS

Conduit elbows are used with flying leads and terminal block versions of the ST5484E transmitter. They are not compatible with MIL-connector versions of the transmitter. A variety of available configurations accommodate English and metric conduit thread sizes, hazardous area approvals, materials of construction, and IP ratings. Note that not all configurations are available with hazardous area approvals or IP ratings. Consult the ordering information below. For ST5484E's that need an explosion proof (Ex d) rating, that are utilizing flying leads, ST5484E Options D=0, 1, 5, & 6, will have an attached 8200 conduit elbow and should utilize the elbow mounted 4 position terminal block, or the flying lead conductors must be connected within a certified junction box or other certified connection location. For ST5484E's that need an explosion proof (Ex d) rating, utilizing integral terminal block, Option D=2 & 3, or utilizing the 4 position terminal block, shown in Figure 1, with flying leads Options D=0, 1, 5, & 6, no junction box is necessary. Table 4 in the datasheet relates what hazardous area (Option C) is allowed per ST5484E Connection (Option D). ST5484E sold with an explosion proof rating (Ex d) or increased safety (Ex ec) will include a 8200 explosion proof elbow and will be affixed at the factory. For increased safety (Ex ec) with D=4 (2-pin MIL connector), 8200 elbow will not be included.

A A A - B
8200- □□□-□

ELBOWS									
A	**A**	**A**	**B[2,5]**	**Conduit Fitting**	**TB***	**Coating**	**Approvals**	**IP Rating (Elbow)**	**Material**
0	0	0		1" NPT		Powder	NRTL[1]	NEMA4	Copper-free aluminum
0	0	0	IEC	1" NPT		Powder	ATEX/IECEx[3,4]	IP66	Copper-free aluminum
0	0	1		¾" NPT		Powder	NRTL[1]	NEMA4	Copper-free aluminum
0	0	1	IEC	¾" NPT		Powder	ATEX/IECEx[3,4]	IP66	Copper-free aluminum
0	0	3		½" NPT		Powder	NRTL[1]	NEMA4	Copper-free aluminum
0	0	3	IEC	½" NPT		Powder	ATEX/IECEx[3,4]	IP66	Copper-free aluminum
0	0	5		½" NPT		None	NRTL/UKEX/ATEX/IECEx	NEMA4/IP66	303 stainless steel
0	0	6		½" NPT	Y	None	NRTL/UKEX/ATEX/IECEx	NEMA4/IP66	303 stainless steel
0	0	8		M20 x 1.5		Powder	NRTL[1]	NEMA4	Copper-free aluminum
0	0	8	IEC	M20 x 1.5		Powder	ATEX/IECEx[3,4]	IP66	Copper-free aluminum
0	0	9		M20 x 1.5	Y	Powder	UL / CSA	IP66	Copper-free aluminum
0	0	9	IEC	M20 x 1.5	Y	Powder	IECEx	IP66	Copper-free aluminum
0	1	0		¾" NPT	Y	Powder	UL / CSA	IP66	Copper-free aluminum
0	1	0	IEC	¾" NPT	Y	Powder	IECEx	IP66	Copper-free aluminum
0	1	1		½" NPT		None	NRTL/UKEX/ATEX/IECEx	NEMA4/IP66	316L stainless steel
0	1	2		½" NPT	Y	None	NRTL/UKEX/ATEX/IECEx	NEMA4/IP66	316L stainless steel
1	0	1		¾" NPT		Powder + clear epoxy	NRTL[1]	NEMA4	Copper-free aluminum
1	0	3		½" NPT		Powder + clear epoxy	NRTL[1]	NEMA4	Copper-free aluminum
1	0	5		½" NPT		Clear epoxy coated	NRTL/UKEX/ATEX/IECEx	NEMA4/IP66	303 stainless steel
1	0	6		½" NPT	Y	Clear epoxy coated	NRTL/UKEX/ATEX/IECEx	NEMA4/IP66	303 stainless steel
1	0	8		M20 x 1.5		Powder + clear epoxy	NRTL[1]	NEMA4	Copper-free aluminum
1	0	8	IEC	M20 x 1.5		Powder + clear epoxy	None	IP66	Copper-free aluminum
1	1	1		½" NPT		Clear epoxy coated	NRTL/UKEX/ATEX/IECEx	NEMA4/IP66	316L stainless steel
1	1	2		½" NPT	Y	Clear epoxy coated	NRTL/UKEX/ATEX/IECEx	NEMA4/IP66	316L stainless steel

*TB = 4 Position Terminal Block, Mounted in Elbow

NOTES: For Notes and conduit elbow reducers, see next page.

8200-000 IEC Reducers			
Part	**Description**	**Material**	**Rating**
91104-032	Reducer, 1”NPT(M) - ¾”NPT(F)	Nickle plated brass	ATEX/IECEx
91104-031	Reducer, 1”NPT(M) - ½”NPT(F)		
91104-022	Reducer, 1”NPT(M) - M20 X 1.5(F)		
91104-033	Reducer, 1”NPT(M) - M20 X 1.5(F)	316SS	ATEX / IECEx
8200-000 Reducers			
Part	**Description**	**Material**	**Rating**
91104-011	Reducer, 1”NPT(M) - ¾”NPT(F)	Copper-free Aluminum	NRTL
91104-015	Reducer, 1”NPT(M) - ½”NPT(F)		

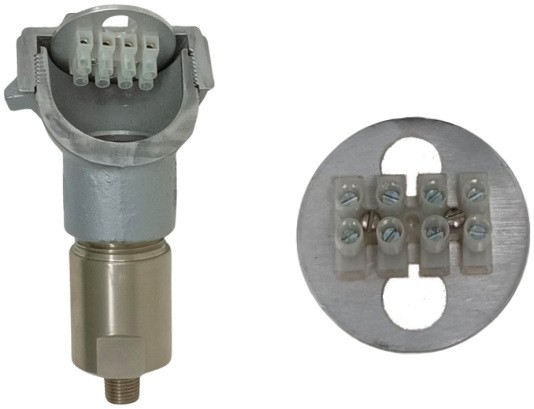

Figure 1: 4 Position Terminal Block, Mounted in Elbow, When Ordered

Copper-Free Aluminum Elbows
(all models except AAA=005, 006, 011, 012, 105, 106, 111 or 112)
Elbow made from powder-coated 413 aluminum that is rated NRTL Type 4X (Corrosion Resistant) and have passed the 200 Hour Salt Spray per clause 8.9 test in UL50E (“Standard for Environmental Considerations for Electrical Enclosures”)

Stainless Steel Elbows
(303 models AAA=005, 006, 105, or 106 and 316L models AAA=011, 012, 111 and 112)

NOTES:
1. NRTL approved through manufacturer (not Metrix) for the following areas:
   Class I, Div. 1 (Grps C & D)
   Class II, Div. 1 (Grps E, F & G)
   Class III
2. B=IEC is only available for AAA=001, 003, 005, 008, and 105 at this time
3. ATEX approved through manufacturer (not Metrix), (B=IEC)
   ITS09ATEX16417U
   Ex II2G, Ex d IIC
   CML 16ATEX1325X
   Ex II2GD, Ex db IIB Gb, Ex tb IIIC Db IP65 minimum
4. IECEx approved through manufacturer (not Metrix)
   IECExITS09.0024U
   Ex d IIC
   IECEx QPS 16.0012X
   Ex db IIB Gb, Ex tb IIIC IP66
5. Elbow 8200-AAA-IEC is required for ST5484E installations meeting ATEX/UKEX/IECEx/INMETRO/KOSHA/NEPSI Ex d (flameproof) hazardous area certifications UL approved through manufacturer (by Metrix for AAA=005 and AAA=105) for the following areas:
   Class I; Div. 1 (Grps. B, C, D)
   Class II; Div. 1 (Grps. E, F, G)

ACCESSORIES - CABLES

	Part Number	Description
NOTE: Use dielectric grease, see note in installation manual.	**8978-111-XXXX**	**2-pin MIL Splash-Proof (IP66) Cable Assembly** Two (2) pin socket connector with integral, molded splash proof boot with 6.4 mm (0.25”) diameter polyurethane jacketed cable with twisted shielded pair wires. XXX.X = cable length in meters (example: 0035= 3.5 m) **NOTE:** Must be ordered in increments of 0.5m
	8978-211-XXXX	**2-pin MIL Cable Assembly** Similar to 8978-111 but without splash-proof boot and without IP66 rating; identical constraints on XXXX ordering options.
	8978-200-0000	**2-pin MIL Connector Assembly** Similar to 8978-211 but without cable (connector can be disassembled for field installation of cable)
	8978-311-XXXX	**2-pin MIL (IP67) Cable Assembly** Similar to 8978-111 but uses overmolded screw-type connector for IP67 rating. 4.9mm (0.19”) diameter polyurethane jacketed cable encapsulates a single twisted pair of 20 AWG conductors and shield. Gold plated contacts, Stainless steel 316L Nut. XXX.X = cable length in meters (example: 0050= 5.0 m) **NOTE:** only 5m, 10m, and 20m lengths available at this time. 5m length stock std; other length may incur longer lead times.
NOTE: Use dielectric grease, see note in installation manual.	**9334-111-XXXX-YYYY**	**2-pin MIL Splash-Proof Cable Assembly With Armor (IP66)** Used with 2-pin MIL-style connector. Connector is fully potted and provided with integral molded boot to provide a seal against moisture ingression. 7.1mm (0.28”) diameter 304 stainless steel armor encapsulates a single twisted pair of conductors and shield. XXX.X = armor length in meters (example: 0035= 3.5 m) Min. armor length: 0.5m Max. armor length: 60m Must be ordered in 0.5m increments YYY.Y = cable length in meters, in 0.5 m increments; **NOTE:** cable length must exceed armor length by at least 0.5 m.
	9334-211-XXXX-YYYY	**2-pin MIL Armored Cable Assembly (IP66)** Similar to 9334-111 but without splash-proof boot and identical constraints on XXXX and YYYY ordering options.

ACCESSORIES (Continued)

	Part Number	Description
	8169-75-002-XXX	**2-wire Cable Assembly** Designed for installations where conduit will not be used to protect field wiring. Fitting mates directly to all 8200 elbows with ¾" NPT reducers. Cable is 2-conductor (20 AWG) twisted, shielded pair in PVC jacket. Cable grip included for strain relief. Material: zinc-plated steel XXX= length in feet (example: 010=10 feet) Min. cable length: 1 foot (001) Max. cable length: 999 feet (999)
	8201-001	**Conduit Union** Fits between ST5484E and 8200 conduit elbow when there is not enough room to rotate the elbow. Suitable for Class I, Div 1 (Grps A,B,C,D) and Class II, Div 1 (Grps E,F,G) hazardous areas. Material: zinc-plated steel
	7084-001	**Flange Mount Adapter** Adapts ½" NPT mounting stud on ST5484E to 3-hole flat-base pattern. Hole pattern is three equally spaced 0.26" diameter holes on 1.5" diameter circle. Adapter is 2" diameter x 0.75" thick. Material: 303 stainless steel
	7084-002	**Flange Mount Adapter** Same as 7084-001 except center hole adapts ¼" NPT stud on the 5484E.
	7084-005	**Flange Mount Adapter** Same as 7084-001 except center hole adapts ⅜ x 24 UNF stud on the 5484E.
	8253-002	**½" NPT to ¼" NPT Reducer Bushing** Adapts ¼" NPT stud on ST5484E (B=0) to ½" NPT mounting hole. Material: 303 stainless steel
	93818-004	**Cable Grip Strain Relief Fitting** Used primarily with 8978 cable assemblies where cable enters junction box. ¾" NPT male thread to cable grip. Fits cable diameters from 0.156" to 0.25". Complete with sealing ring and locknut. Hot dip / mechanically galvanized finish. Suitable for NEMA 4 junction boxes.
NOTE: This cable grip can be used with the 9334 cable.	93818-018	**Cable Grip Strain Relief Fitting** Similar to 93818-004, but fits larger cable diameters from 0.4" to 0.5", such as customer-supplied cables used with terminal block versions of ST5484E (D = 2 or 3).

OUTLINE DIAGRAMS

Side View

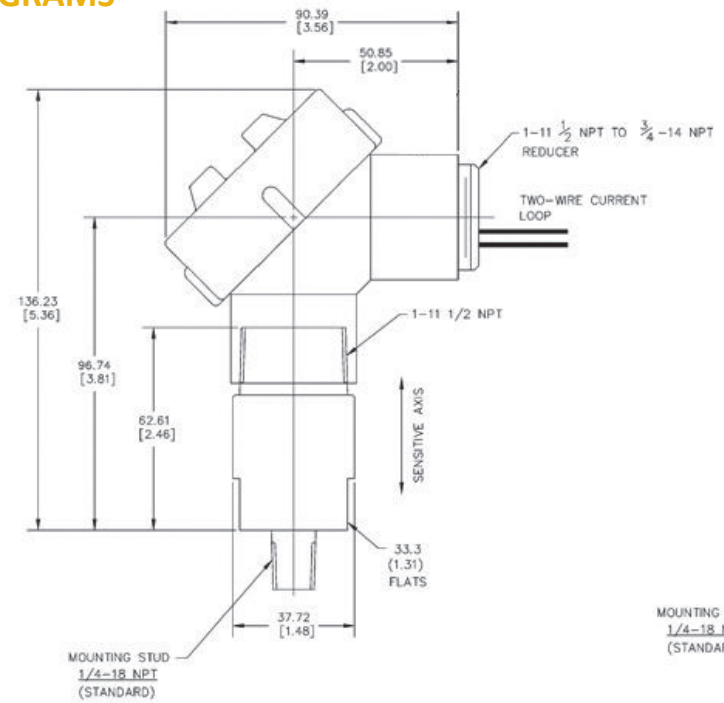

Side View

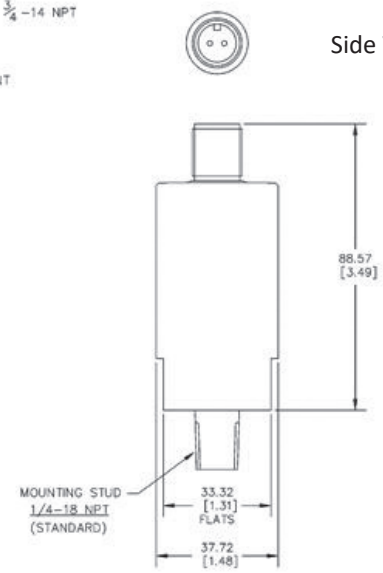

Figure 2: Outline dimensions of the ST5484E (all versions except MIL-Style Connector). Dimensions in mm [inches]. Optional* 8200-001 Copper-Free Aluminum conduit elbow shown installed. 1.55 lbs (0.70 kg)

* **NOTE:** 8200-000-IEC or 8200 Stainless Steel Elbow is mandatory for ATEX/UKEX/IECEx/INMETRO/KOSHA/NEPSI Ex d (flameproof) or Ex ec (increased safety when D≠4) approved installations. The 8200-000 or 8200 Stainless Steel Elbow is mandatory for NRTL Ex d (flameproof) approved installations.

Figure 3: Outline dimensions of the ST5484E-XXX-XX4-XX (MIL-Style Connector). Dimensions in mm [inches]. 0.9 lbs (0.41 kg)

Side View

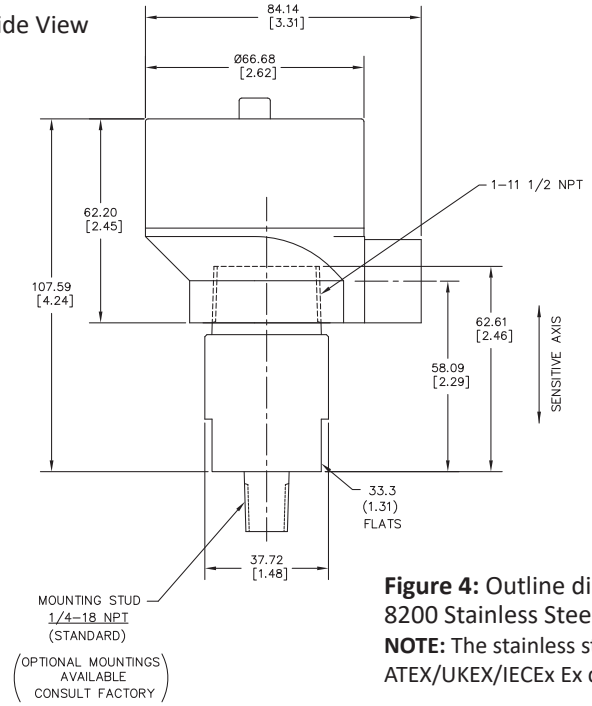

Top View

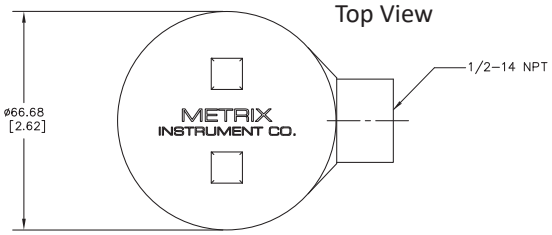

Figure 4: Outline dimensions of the ST5484E (with the optional 8200 Stainless Steel Conduit Elbow installed).
NOTE: The stainless steel elbow meets the requirements for NRTL/ATEX/UKEX/IECEx Ex d (flameproof). 2.65 lbs (1.2 kg)

WIRING CONNECTIONS

Table 5 – Wiring Connection Legend		
Connector Type	**Dynamic Signal Connections**	**Power Connections**
MIL-C-5015	Not Available	24 V_{DC} power may be connected to all ST5484E models without regard to polarity. Sensor uses IPT® independent polarity diode bridge circuit that will always orient voltage correctly inside sensor, regardless of polarity externally. **NOTE:** Although the ST5484E allows polarity in either direction, installations using I.S. barriers will need to observe correct polarity at the barrier input side. However, the barrier output side (i.e., sensor connection) may be wired without regard to polarity.
2-wire flying leads	Not Available	
2-wire terminal block	Not Available	
4-wire flying leads	Red: Power + (P+) Blue: Power - (P-) White: Dynamic Signal - (S-) Black: Dynamic Signal + (S+)	
4-wire terminal block	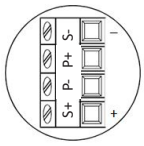	

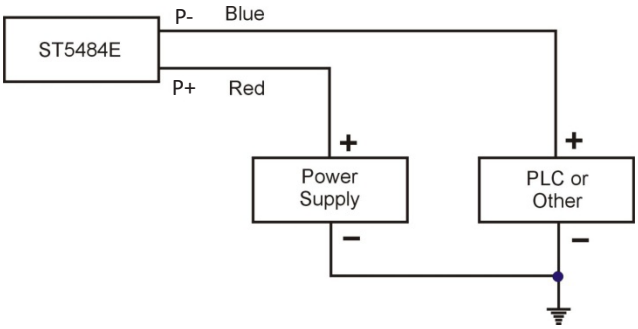

Figure 5: Typical installation for a single ST5484E seismic vibration transmitter.

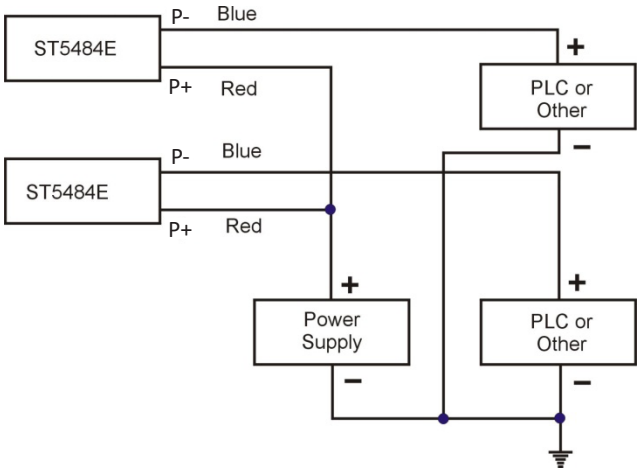

Figure 6: Typical installation for multiple ST5484E seismic vibration transmitters.

ADDITIONAL DOCUMENTATION

Description	Metrix Document Number
Manual	M9162
Installation Drawing – Hazardous Area with I.S. Barriers (NRTL)	9426
Installation Drawing – Hazardous Area with I.S. Barriers (CENELEC)	9278
Installation Drawing – Div 2 / Zone 2	1086105

Note: Metrix is continuously improving our products. Please refer to our website to download the latest version of this document.

All trademarks used in this document belong to Metrix.

© 2026, Metrix Instrument Company, L.P. All rights reserved.