ST5484E 2-WIRE SEISMIC VIBRATION TRANSMITTER

Installation Manual

1. OVERVIEW

The ST5484E Seismic Vibration Transmitter combines a vibration sensor and signal conditioner in a single package for sensing machinery vibration level and transmitting a proportional 4-20 mA signal directly to PLCs, DCSs, monitors, and computers. Versions with 2 wires, 4 wires, terminal blocks, or MIL-type connector are available.

The transmitter has no moving parts and is encapsulated in a stainless steel housing. Each transmitter is factory calibrated to the sensitivity marked on the label. An optional dynamic signal output can be specified.

Refer to Metrix Datasheet 1004457 for specifications, ordering information, and outline dimensions.

Flying Leads

4-Pin Terminal Block

2-Pin Terminal Block

2-Pin MIL Connector

2. MOUNTING

It is important to solidly mount the transmitter body to the machine surface. Refer to section 6 on transducer placement. Different machine preparations are required for the two basic transmitter mounting styles; NPT (National Pipe Thread) and machine thread (UNF and Metric). Transmitters with the NPT type mounting stud are secured by the thread engagement and the base of the transmitter does not contact the machine surface. Transmitters with the machine thread studs must contact the machine surface. The base of the transmitter must make square and direct contact. This requires preparing the surface of the machine with a 1 1/2 inch counter bore (surfacing tool). This tool can be used with a portable drill equipped with a magnetic base but care must be taken so that the tapped and threaded hole is perpendicular to the machined surface. The transmitter must make contact all the way around its base surface. Contact Metrix for more detailed counter bore instructions.

If installing a transmitter with a standard 1/4 inch NPT stud, drill a hole using a 7/16 inch bit, 5/8-7/8 inch deep. Then tap using a 1/4 - 18 NPT (tapered pipe tap). Use a NPT Go/NoGo gauge to ensure proper depth has been met (the gauge notch or ring face must line up with the end of the product thread). Hand-tighten the transmitter and then turn an additional 1 to 2 turns using a wrench on the wrench flats. **Do not use a pipe wrench.** A pipe wrench can apply extreme forces to the body and potentially damage electronic components. A 1/4 inch to 1/2 inch NPT bushing is available for mounting the transmitter in existing 1/2 inch NPT holes. Also, a Metrix model 7084 Flange Adapter can be used between the transmitter and the machine surface when there is not enough surface thickness to drill and tap a hole. The flange adaptor mounts with three small screws.

If installing a transmitter with one of the straight machined thread sizes, follow standard drill and tap procedures. Do not drill a hole larger that the counter bore pilot diameter before using the counter bore to prepare the machine surface. Drill out the hole with the correct tap drill size after preparing the surface.

The sensitive axis of the transmitter is in line with the mounting stud. The transmitter can be oriented in any (0 to 360 degree) position.

3. WIRING

3.1 General

The ST5484E is connected like other loop powered transmitters. The following is a summary based on area designations.

Connect the field wiring in accordance with the appropriate portion of Figure 1.

The ST5484E terminal block option must be used with the following conductors specification:

- 14-24 AWG solid copper conductors OR
- 20-26 AWG stranded copper conductors

The ST5484E transmitter requires a minimum of 11 VDC for proper operation. This is the minimum voltage required at the transmitter (not the power supply), after all other voltage drops across field wiring and receiver input impedance have been accounted for with the maximum 20mA of loop current flowing. The minimum loop power supply voltage required is therefore 11 VDC plus 1 volt for each 50 Ω of total loop resistance.

CAUTION: Use of a high-speed torque screwdriver may damage the terminal blocks.

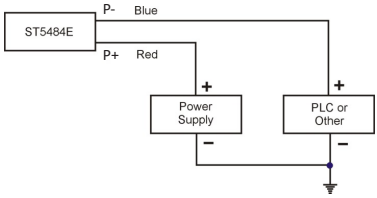

Figure 1a: Single-transmitter loops

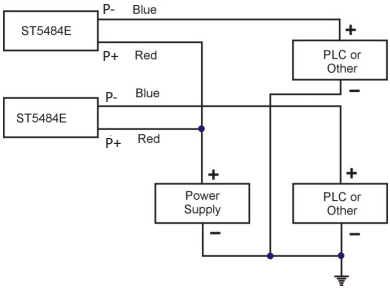

Figure 1b: Multiple-transmitter loops

Example:

Component	Resistance
Signal wiring	10 Ω
DC Input Impedance of receiver	250 Ω
TOTAL LOOP RESISTANCE	**260 Ω**

Minimum supply voltage = 260 Ω (1 V/50 Ω) + 11 V = 16.2 VDC

The maximum loop power supply voltage that may be applied is 29.6 VDC (intrinsically safe) or 30VDC (explosion proof and non-incendive). The maximum loop resistance (RL) is calculated by the equation: **RL = 50 (VS - 11) Ω**
Example: RL = 50 (24 - 11) = 650 Ω for a 24 VDC loop supply.

3.2 Intrinsically Safe Installation In Hazardous Locations

Connect the field wiring in accordance with Metrix drawing 9426 for NRTL Class I, (A,B,C & D) and Metrix drawing 9278 for IECEx/ATEX/UKEX (Ex ia IIC T4 Ga) approvals. The leads must be terminated inside an enclosure with a degree of protection of at least IP20. A Metrix elbow from the 8200 series may be used for these purposes. Refer to Metrix Datasheet 1004457 for additional details on accessories. The ambient temperature range is -40°C to 100°C.

The transmitter requires a minimum of 11 VDC for proper operation. The voltage drop across the specified non-isolated barriers with a 20 mA loop current is 8.1 VDC. As such, The minimum loop power supply voltage required is 19.1 VDC plus 1 volt for each 50 Ω of loop resistance. The maximum loop power supply voltage that may be applied to the safety barrier is 26 VDC. Therefore, the maximum loop resistance with a 26 VDC supply is 345 Ω.

Example:

Component	Resistance
Signal wiring	5 Ω
DC Input Impedance of receiver	100 Ω
TOTAL LOOP RESISTANCE	**105 Ω**

Minimum supply voltage = 105 (1 V/50 Ω) + 19.1 V = 21.2 VDC

3.3 Explosion-Proof Installation In Hazardous Locations (NRTL)

Some models of ST5484E transmitters are NRTL certified explosion-proof, NRTL US/C, Class I, Div 1, Grps B-D and Class II, Div 1, Grps E-G (explosion proof). Connect the field wiring in accordance with the appropriate portion of Figure 1. Refer to section 3.1 for loop voltage and resistance requirements. All conduit and junction boxes used must be certified explosion-proof for the class, division, and group required by the application. Installation of the transmitter must meet all of the explosion-proof installation requirements of the local governing agency and facility safety procedures.

3.4 Flame-Proof Installation In Hazardous Locations (ATEX, UKEX, IECEX)

Some models of ST5484E transmitters are ATEX/UKEX/IECEx certified flame-proof, Ex d IIC T4 Gb. Connect the field wiring in accordance with the appropriate portion of Figure 1. Refer to section 3.1 for loop voltage and resistance requirements. All conduit and junction boxes used must be certified flame-proof for the area required by the application. Installation of the transmitter must meet all of the flame-proof requirements of the local governing agency and facility safety procedures. The Metrix part 8200-001-IEC elbow is required to meet this approval.

NOTES: (UNLESS OTHERWISE SPECIFIED)

1. SAFE AREA APPARATUS IS NOT SPECIFIED EXCEPT THAT IT MUST NOT BE SUPPLIED FROM NOR CONTAIN IN NORMAL OR ABNORMAL CONDITIONS A SOURCE OF POTENTIAL WITH RESPECT TO EARTH IN EXCESS OF 250 VRMS OR 250 VDC.

2. THE SAFETY BARRIER MUST CONFORM TO THE FOLLOWING:

   $V_{oc}, V_o \leq V_{max}, V_i$

   $I_{sc}, I_i, I_{max}, I_i$

   $P_o \leq P_i$

3. CIRCUIT IN HAZARDOUS AREA MUST BE CAPABLE OF WITHSTANDING A VOLTAGE TEST OF 500 VRMS TO EARTH OR TO THE FRAME OF THE APPARATUS FOR ONE MINUTE.

4. THE CAPACITANCE AND EITHER THE INDUCTANCE OR INDUCTANCE TO RESISTANCE (L/R) RATIO OF THE INTERCONNECTING CABLE MUST NOT EXCEED THE FOLLOWING:

   $C_{cable} \leq C_a - C_i$

   $L_{cable} \leq L_a - L_i$

5. THE HAZARDOUS AREA CABLE IS TO BE INSTALLED AS EITHER A SEPARATE CABLE OR A SEPARATE CIRCUIT WITHIN A "TYPE A" CABLE OR WITHIN A "TYPE B" CABLE AS DEFINED IN EN 50039 (1980). THE PEAK VOLTAGE OF ANY CIRCUIT IN THE "TYPE B" CABLE MUST NOT EXCEED 60V.

6. THE INSTALLATION MUST COMPLY WITH THE APPROPRIATE NATIONAL INSTALLATION REQUIREMENTS. EXAMPLE: UK. BS5345 PART 4 (1977).

7. REFER TO SPECIFICATION DRAWING 9163 FOR ADDITIONAL INSTALLATION AND WIRING DETAILS. MODEL 8200-001 CONDUIT ELBOW OR OTHER IP 20 RATED FITTING MUST BE EMPLOYED TO PROTECT THE ELECTRICAL CONNECTION. MATERIAL OF FITTING MUST CONTAIN LESS THAN 6% MAGNESIUM.

INSTALLATION – PROXIMITY SENSOR IN HAZARDOUS LOCATION CSA

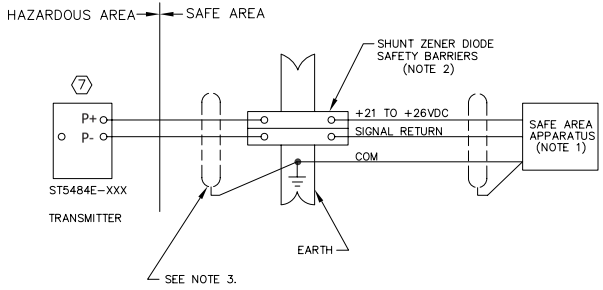

Entity Parameters
Vmax, Vi = 29.6V
Imax, Ii = 100mA
Pi = 0.74W
Ci = 70.4nF
Li = 0.5mH

AGENCY APPROVED PRODUCT

DO NOT DEVIATE FROM DOCUMENTED CONSTRUCTION OR LISTED PARTS

Verifie' et Certfie' conforme a' l'execution

MATERIAL:	UNLESS OTHERWISE SPECIFIED DIMENSIONS ARE IN INCHES. ALL CORNERS BROKEN TO .010 MIN RADIUS AND TOLERANCES ARE:		APPROVALS	DATE	METRIX HOUSTON, TEXAS U.S.A.
FINISH:	FRACTIONS: ±1/64 DECIMALS: .XX ±.01 .XXX ±.005 ANGLES: ±1° SURFACE FINISH 64		DRAWN BY: A. Wilson	07-25-01	INSTALLATION ST5484E-XXX TRANSMITTER
THIS DOCUMENT AND ALL INFORMATION HEREON IS THE PROPERTY OF METRIX INSTRUMENT CO. APPROVAL MUST BE OBTAINED BEFORE IT IS REPRODUCED OR INFORMATION HEREON IS ISSUED TO A THIRD PARTY. THIS DOCUMENT MUST BE RETURNED UPON REQUEST.		ST5484E NEXT ASSY USED ON	CHECKED BY:		SIZE B DRAWING NO. 9426-AGENCY REV. B
			APPROVED BY:		SCALE: NONE SHEET: 1 of 1
		APPLICATION	DO NOT SCALE DRAWING		

REVISIONS	
REV	CR/CHANGE
A	RELEASE
B	REVISE ENTITY PARAMETERS TABLE PER AGENCY

NOTES: (UNLESS OTHERWISE SPECIFIED)

1. SAFE AREA APPARATUS IS NOT SPECIFIED EXCEPT THAT IT MUST NOT BE SUPPLIED FROM NOR CONTAIN IN NORMAL OR ABNORMAL CONDITIONS A SOURCE OF POTENTIAL WITH RESPECT TO EARTH IN EXCESS OF 250 VRMS OR 250 VDC.

2. THE SAFETY BARRIER MUST CONFORM TO THE FOLLOWING:

   Voc, Vo ≤ V max, Vi
   Isc, Ii , Imax, I;
   Po ≤ Pi

3. CIRCUIT IN HAZARDOUS AREA MUST BE CAPABLE OF WITHSTANDING A VOLTAGE TEST OF 500 VRMS TO EARTH OR TO THE FRAME OF THE APPARATUS FOR ONE MINUTE.

4. THE CAPACITANCE AND EITHER THE INDUCTANCE OR INDUCTANCE TO RESISTANCE (L/R) RATIO OF THE INTERCONNECTING CABLE MUST NOT EXCEED THE FOLLOWING:

   C cable ≤ Ca – Ci
   L cable ≤ La – Li

5. THE HAZARDOUS AREA CABLE IS TO BE INSTALLED AS EITHER A SEPARATE CABLE OR A SEPARATE CIRCUIT WITHIN A "TYPE A" CABLE OR WITHIN A "TYPE B" CABLE AS DEFINED IN EN 50039 (1980). THE PEAK VOLTAGE OF ANY CIRCUIT IN THE "TYPE B" CABLE MUST NOT EXCEED 60V.

6. THE INSTALLATION MUST COMPLY WITH THE APPROPRIATE NATIONAL INSTALLATION REQUIREMENTS. EXAMPLE: UK. BS5345 PART 4 (1977).

7. REFER TO SPECIFICATION DRAWING 9163 FOR ADDITIONAL INSTALLATION AND WIRING DETAILS. MODEL 8200-001 CONDUIT ELBOW OR OTHER IP 20 RATED FITTING MUST BE EMPLOYED TO PROTECT THE ELECTRICAL CONNECTION. MATERIAL OF FITTING MUST CONTAIN LESS THAN 6% MAGNESIUM.

INSTALLATION – VIBRATION TRANSMITTER IN HAZARDOUS LOCATION ATEX/IECEx Ex ia

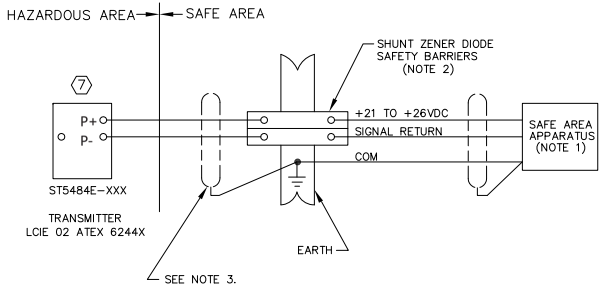

Entity Parameters
Ui : 29.6V
Ii : 100mA
Pi : 0.75W
Ci : 70nF
Li = 0.60uH

AGENCY APPROVED PRODUCT

DO NOT DEVIATE FROM DOCUMENTED CONSTRUCTION OR LISTED PARTS

Verifie' et Certfie' conforme a' l'execution

MATERIAL:

FINISH:

THIS DOCUMENT AND ALL INFORMATION HEREON IS THE PROPERTY OF METRIX INSTRUMENT CO. APPROVAL MUST BE OBTAINED BEFORE IT IS REPRODUCED OR INFORMATION HEREON IS ISSUED TO A THIRD PARTY. THIS DOCUMENT MUST BE RETURNED UPON REQUEST.

UNLESS OTHERWISE SPECIFIED DIMENSIONS ARE IN INCHES. ALL CORNERS BROKEN TO .010 MIN RADIUS AND TOLERANCES ARE:

FRACTIONS: ±1/64 DECIMALS: .XX ±.01 .XXX ±.005

ANGLES: ±1°

SURFACE FINISH 64

NEXT ASSY	ST5484E USED ON
APPLICATION	

APPROVALS	DATE
DRAWN BY: A. Wilson	09-09-13
CHECKED BY:	
APPROVED BY:	

DO NOT SCALE DRAWING

METRIX HOUSTON, TEXAS USA

INSTALLATION ST5484E-XXX TRANSMITTER

SIZE B | DRAWING NO. 9278-AGENCY | REV. B

SCALE: NONE | SHEET: 1 of 1

METRIX AMETEK

WARNING:
ATEX/UKEX/IECEx Specific conditions of use (Special Conditions) (Ex ec)

The following conditions relate to safe installation and/or use of the equipment.

- Transient protection shall be provided that is set at a level not exceeding 140 % of the peak rated voltage value at the supply terminals to the device.
- The device does not incorporate an external earth facility. It is the responsibility of the user to ensure adequate earth continuity.
- For ST5484E transmitters with certified capped elbow:
  a. The user shall use an Ex eb certified entry device at the capped elbow's entry while respecting the installation requirements of EN 60079-14.
  b. Disconnect the device from supply circuit before opening the capped conduit elbow.
  c. The disassembling of the transmitter from its capped elbow is not allowed
- For ST5484E transmitters with 2-Pin MIL connector: the mating female connector provided by the end user shall be in accordance with all applicable clauses of EN 60079-0 and EN 60079-7. A minimum degree of protection IP54 according to EN 60529 shall be ensured.
  The mating connector shall not be connected or disconnected when energized.
- For ST5484E transmitters with flying leads: the flying leads shall be suitably protected from impact and shall be terminated within a suitably certified enclosure or in safe area. The installation shall guarantee that no pulling force will be applied to the leads.
- Ambient Temperature Range:

T4 Temperature Code	T6 Temperature Code
-40 °C to +100 °C	-40 °C to +73 °C

WARNING:
ATEX/UKEX/IECEx Specific conditions of use (Special Conditions) (Ex ia)

The following conditions relate to safe installation and/or use of the equipment.
Vibration transmitter - Type: ST5484E-AAA-BBCD-EF:

- The intrinsically safe apparatus shall only be connected to associated intrinsically safe apparatus certified for the intended use. This association shall comply with the requirements of EN 60079-25 standard.
- Ambient temperature range (T4): -40 °C to +100 °C
- When the optional aluminium elbow enclosure is used, the equipment must be installed in such a way that, even in the event of rare incidents, the aluminium enclosure cannot be an ignition source due to impacts or frictions.
- The models equipped with terminals or flying leads shall be mounted on an additional enclosure having a protection degree of at least IP20 and conform to EN IEC 60079-0.
- For the models equipped with additional dynamic output, this output cannot be used when the equipment is situated in hazardous area.
- The equipment must be installed in accordance with drawing 9278.

WARNING:
ATEX/UKEX/IECEx Specific conditions of use (Special Conditions) (Ex d)

The following conditions relate to safe installation and/or use of the equipment.

- The final user shall use an Ex d certified entry device at the elbow's entry while respecting the installation requirements of EN 60079-14. For ST5484E transmitters with flying leads, a flameproof entry device with sealing compound (barrier seal) shall be used.
- The equipment does not incorporate an external earth facility. It is the responsibility of the user to ensure adequate earth continuity.
- The disassembling of the device from its conduit capped elbow is not allowed.
- Ambient temperature range:

T4 Temperature Code	T6 Temperature Code
-40 °C to +100 °C	-40 °C to +73 °C

WARNING:
NRTL Equipment Installation Requirement per ordinary locations standards, C22.2/UL 61010-1:

Applicable for permanently connected equipment:

a) A switch or circuit-breaker must be included in the installation;
b) It must be suitably located and easily reached;
c) It must be marked as the disconnecting device for the equipment.

Equipment environmental Ratings:

a) Pollution degree 3
b) Installation category I
c) Altitude 2000m
d) Outdoor: Type 4x
e) Temperature -40°C to 100°C

4. ELECTROMAGNETIC COMPATIBILITY

In order to meet the requirements of electromagnetic compatibility in areas of high electromagnetic interference, the field wiring must be:

- Shielded twisted pair cable enclosed in grounded metallic conduit, or
- Double shielded twisted pair cable with a metallic body cable gland fitting and with the outer shield grounded.

Use standard two-conductor, twisted pair, shielded wiring for the long run to the instrumentation enclosure. The transmitter is connected like other loop-powered end devices.

NOTE: Metrix also strongly recommends the use of our ferrite bead kit (Metrix p/n 100458) as an extra precaution against electromagnetic interference that may be induced in field wiring from subsequently bleeding into the transmitter.

When vibration level at transmitter is…	Transmitter output will be…	PLC (or other) should read…
0.0 in/s (i.e. no vibration)	4.0 mA (± 0.1 mA)	0.00 in/sec
1.0 in/s (i.e. full scale vibration)	20.0 mA (± 0.5 mA)	1.00 in/sec

Momentary “jolts” that can occur at start-up, or during some operating condition changes, do not reflect a machine’s steady-state operating condition. To prevent such occurrences from generating nuisance alarms, program a time delay into the alarm such that the indicated vibration level must persist above the alarm setpoint for a preset period of time before an alarm is generated. The indicated vibration level must cross the threshold level and stay above it for a preset time before any alarm action is taken. A 2- to 3-second delay is normally applied to most machinery. Consult Metrix if you have a question about your machine’s operating characteristics.

Some rough starting machinery may also need a start-up time lockout for alarms. A start-up lockout is different than a time delay. A start-up lockout functions the same as a time delay, but is usually set to a much longer time. Both may be needed.

5. CONNECTION TO PLC OR OTHER INDICATING INSTRUMENT

The first step in configuring the PLC, DCS, or other recording instrument is to determine the source of power. The ST5484E requires loop power. Some analog input channels on a PLC or DCS, for example, provide this power from within. If they do not provide power, an external power supply must be provided. Connect the transmitter field wiring using standard instrumentation practices. Scaling of the display is on the basis of the range of the transmitter. The measurement parameter name is “vibration” and the units are “in/s” (inches per second) or “mm/s” (millimeters per second). The example below is based on a standard 1.0 in/s transmitter.

6. TYPICAL TRANSMITTER PLACEMENT

The ST5484E measures seismic vibration (i.e., vibration velocity) at the attachment point on the machine, using engineering units of in/s (inches per second) or mm/s (millimeters per second) depending on the selected ordering option. The transmitter’s sensitive direction is through the long axis of its cylindrical body. It will not measure side-to-side motion.

Typical transmitter mounting for casing vibration measurements is in the horizontal direction at the bearing housings as depicted in Figure 2. The horizontal direction usually incurs more vibration because most machines’ foundation constrains vertical vibration more than horizontal vibration. A horizontal mounting arrangement is also depicted in Figure 3, but with additional detail showing typical accessories.

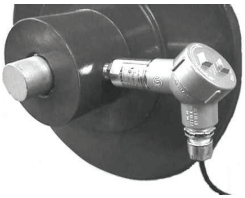

Figure 2
Typical transmitter mounting

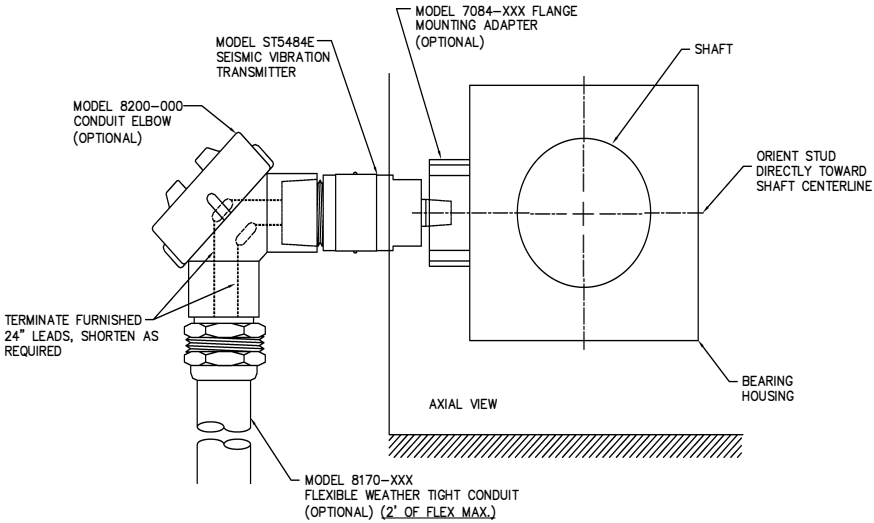

Figure 3

When flying leads are ordered, a 24- or 72-inch length may be specified using ordering option D on the Metrix product datasheet 1004457. These leads may be cut to length and then spliced to field wiring as shown in Figure 3.

NOTE: Hazardous area locations do not allow a splice at the location shown in Figure 3. Instead, the splice must be made in a second conduit hub (meeting splicing requirements) located at the end of flexible conduit.

When mounting transducers in either the horizontal or vertical direction, the thread type matters. If it's a straight thread, then the sensor landing area needs to be spot-faced to get a flat landing surface for the sensor (See Figure 3a). If you're using an NPT thread, then spot facing is not required because the vibration is transmitted faithfully to the transmitter (See Figure 3b).

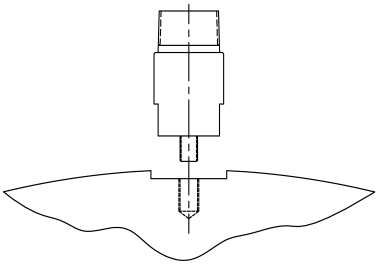

Machine thread style requires prepared surface (spot facing) for bottom contact

Figure 3a

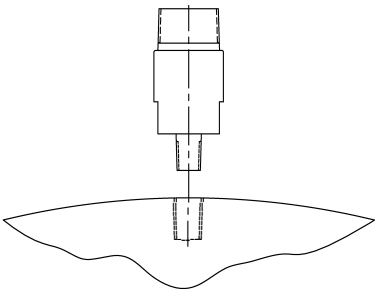

NPT thread style, no prepared surface, (spot facing), contacts through threads

Figure 3b

7. INSTALLATION BEST PRACTICES FOR RFI IMMUNITY

The ST5484E is case isolated from the loop power connection to the PLC, DCS, SCADA, or other +24 VDC alarm system. With the correct grounding scheme, this type of isolation avoids ground loops and results in good radio frequency (RF) immunity. However, in situations which involve interference from high-powered transmitters and especially spread-spectrum type radios, the ST5484E may become vulnerable to RF noise.

Since it is often difficult to identify these situations in advance, Metrix strongly recommends utilizing the following Best Practices when installing all ST5484E transmitters in the field:

1. Twist the sensor leads together (at least 10 twists per foot).
2. Slide the twisted leads through the included ferrite core (Metrix part number 100463) and then wrap around the ferrite core as in the Fig. 4 below. Position as close to the sensor as practical, but at least within 4 centimeters, preferably within the 8200 Conduit Elbow or equivalent. If possible, cut the leads short and use a shielded twisted pair. Follow step 2 in this application as well.

3. As shown in Figure 4, “chokes” that attenuate different frequencies can be created by looping a different number of turns through the ferrite core. More wire turns adds more inductance, attenuating progressively lower frequencies. Multiple “chokes” can be created in this manner and placed in series on the wire leads to cover a broad frequency band. Always locate the choke covering the higher frequency band closest to the sensor.

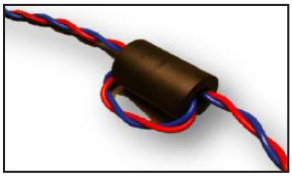

Figure 4: Leads may also be looped through the ferrite core (Metrix PN 100463) to attenuate different frequencies. The optimal number of loops will vary by application and the interfering frequency(ies). The wrapped ferrite core should be placed in the 8200 Conduit Elbow or equivalent.

4. If you are using an armored cable, usually associated with our 2-Pin MIL Style Connector, then it’s useful to put two 10 cm diameter turns in the armored cable within 10 centimeters of the ST5484E transmitter to minimize RFI. See Fig. 5 below.

Figure 5
To maximize RFI immunity with an armored cable, put two 10 cm diameter turns in the armored cable within 10 cm of the ST5484E transmitter.

When attaching conduit to the transmitter, observe the following:

- Because the transmitter is sensitive to vibration, avoid unsupported lengths of conduit and excessive mass (such as large hubs or junctions) hanging directly off the end of the transmitter. These can introduce unwanted vibrations that do not reflect actual machinery vibration and cause mechanical stresses that can lead to premature transducer failure.
- A “Y” type conduit elbow, such as the Metrix 8200 series, is preferred because it prevents the conduit from extending too far away from the transmitter, thus limiting the likelihood of breakage. It also precludes long unsupported lengths of conduit directly aligned with the transmitter’s bore (longitudinal axis) as noted in the bullet above.
- Avoid attachment of rigid conduit directly to the transmitter; instead, use a small length of flexible conduit to mechanically isolate the transmitter from vibration that might occur in rigid conduit.
- If a 1-inch to 3/4-inch reducer is used at the elbow, a smaller diameter flexible conduit can be used.

8. CALIBRATION

The ST5484E transmitter has been factory calibrated for the full-scale vibration level marked on the label. If the calibration is in doubt, the unit can be verified in the field by following the procedures outlined below. Note that there are no Zero and Span adjustments on the transmitter. Additionally, the transmitter uses a true RMS amplitude detection circuit; units supplied with a full scale range in peak units scale the underlying RMS measurement by a factor of 1.414 to provide a “derived peak” rather than true peak measurement.

8.1 Zero Verification

In the absence of vibration the output current should be 4 mA ± 0.1 mA. If the ambient vibration exceeds 2% of full scale, the transmitter should be removed from the machine and placed on a vibration free surface for this measurement. Often a piece of foam can be used to isolate the transmitter from external motion.

8.2 Span Verification

Subject the transmitter to a known vibration within the full scale range marked on the label. If you are using a portable vibration shaker where it can be tested at full scale, the output should be 20 mA ± 0.5 mA.

9. OPTIONAL DYNAMIC OUTPUT

The transmitter can be ordered with an optional dynamic output. Transmitters supplied with this option can be identified by the presence of four flying leads instead of two (Figure 6), or four terminal connections instead of two (Figure 7).

The dynamic output is an acceleration signal with a sensitivity of 100 mV/g, filtered to the same frequency band as used for the 4-20mA velocity measurement (refer to options E and F on the Metrix Datasheet 1004457).

Observe the following when using this output:

- Only an electrically-isolated or battery-powered portable vibration analyzer should be used when connecting to this output. Since this is a loop-powered device, an external ground will affect the loop output and could cause a false alarm.
- When using a portable vibration analyzer or data collector, be sure to turn the instrument sensor power off.
- Most portable vibration analyzers have a low input impedance and they will load this signal, resulting in attenuation of as much as 20% to 30%. Refer to Table 1 which shows the nominal attenuation expected for a given input impedance.
- In all cases for all locations, the use of this signal is for temporary connection only. Permanent connection could violate hazardous location installation requirements.
- Avoid impacting the transmitter or introducing other mechanical vibrations when connecting to this output. Such vibration could result in spurious alarms or machinery trips.
- When output is not in use, be sure leads cannot touch conduit or each other as this will affect the 4-20 mA current output.
- Avoid introducing electrical noise when using this output. Do not use this output with leads longer than 5m (16 feet). Use of longer leads can introduce electrical noise and attenuate high-frequency signal content that may be present in the raw acceleration signal.

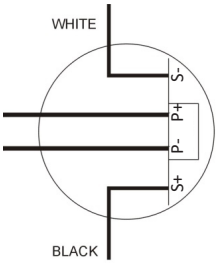

TOP VIEW OF
FLYING LEADS
WIRED VERSION

Figure 6 – Top view showing optional dynamic output connections on transmitters with flying leads

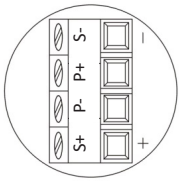

TOP VIEW OF
TERMINAL BLOCK
VERSION

Figure 7 – Top view showing optional dynamic output connections on transmitters with terminal blocks

Table 1	
Input Impedance of Analyzer	**dB Attenuation**
10 MEG	0.01
5 MEG	0.02
2 MEG	0.04
1 MEG	0.09
500 K	0.18
200 K	0.43
100 K	0.84
50 K	1.61
20 K	3.57
10 K	6.10

Red: Power + (P+)
Blue: Power - (P-)
White: Dynamic Signal - (S-)
Black: Dynamic Signal + (S+)

10. SPECIFICATIONS, ORDERING INFORMATION AND OUTLINE DIMENSIONAL DIAGRAMS

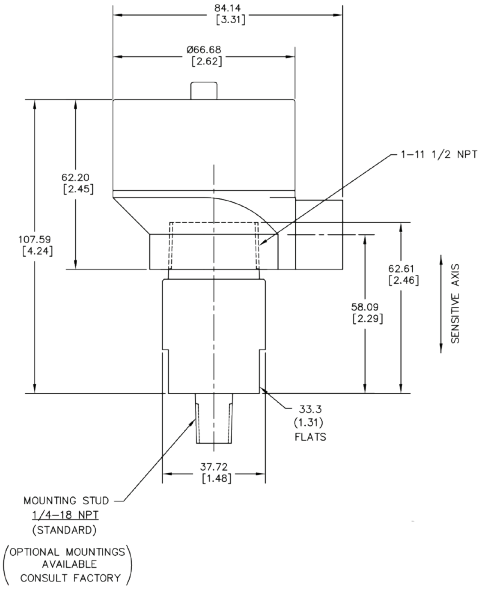

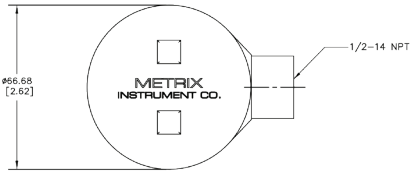

Figure 8: Outline dimensions of the ST5484E (with the optional 8200 Stainless Steel Conduit Elbow installed).

Refer to Metrix product datasheet 1004457 for additional information.

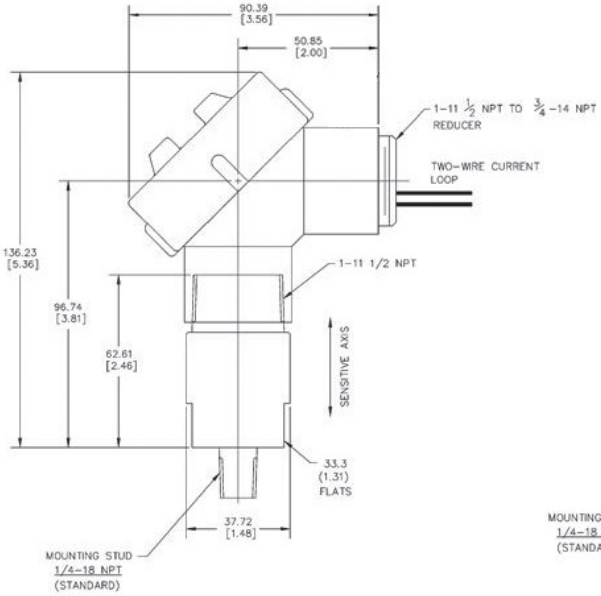

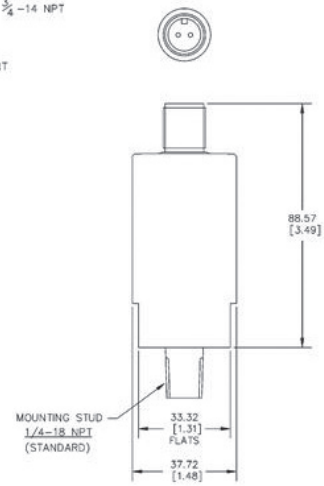

Figure 9: Outline dimensions of the ST5484E (all versions except MIL-Style Connector). Dimensions in mm [inches]. Optional* 8200-001 Copper-Free Aluminum conduit elbow shown installed. 1.55 lbs (0.70 kg)

* **NOTE:** 8200-AAA-IEC elbow is mandatory for ATEX/UKEX/IECEx/INMETRO Ex d (flameproof) approved installations.

Figure 10: Outline dimensions of the ST5484E-XXX-XX4-XX (MIL-Style Connector). Dimensions in mm [inches].

11. ENVIRONMENTAL INFORMATION

This electronic equipment was manufactured according to high quality standards to ensure safe and reliable operation when used as intended. Due to its nature, this equipment may contain small quantities of substances known to be hazardous to the environment or to human health if released into the environment. For this reason, Waste Electrical and Electronic Equipment (commonly known as WEEE) should never be disposed of in the public waste stream. The “Crossed-Out Waste Bin” label affixed to this product is a reminder to dispose of this product in accordance with local WEEE regulations. If you have questions about the disposal process, please contact Metrix Customer Service.

12. HAZARDOUS AREA APPROVALS

MODEL ST5484E			
IECEx Approval (World):	**IEC Markings:** Model ST5484E-XXX-XX8X-XX: Ex db IIC T4 Gb (-40°C≤Tamb≤+100°C) Ex db IIC T6 Gb (-40°C≤Tamb≤+73°C) IECEx CML 23.0096X Model ST5484E-XXX-XX7X-XX: Ex ia IIC T4 Ga (-40°C≤Tamb≤+100°C) Ui≤29.6V, Ii≤100mA, Pi≤0.75W, Ci≤70nF, Li≤0.60uH IECEx CML 23.0096X Model ST5484E-XXX-XXDX-X: Ex ec IIC T4 Gc (-40°C≤Tamb≤+100°C) Ex ec IIC T6 Gc (-40°C≤Tamb≤+73°C) IECEx CML 23.0096X	**IEC Standards:** IEC 60079-0:2017 IEC 600079-1:2014 IEC 60079-0:2017 IEC 600079-11:2011 IEC 60079-0:2017 IEC 600079-7:2017	**WARNING:** DO NOT OPEN WHEN ENERGIZED **ATTENTION:** NE PAS OUVRIR QUAND ÉNERGISÉ
ATEX/UKCA Approval (Europe/UK):	**ATEX/UKCA Markings:** Model ST5484E-XXX-XX8X-XX: Ex II 2G Ex db IIC T4 Gb (-40°C≤Tamb≤+100°C) Ex II 2G Ex db IIC T6 Gb (-40°C≤Tamb≤+73°C) CML 23ATEX149X/CML 23UKEX1250X Models ST5484E-XXX-XX3X-XX or ST5484E-XXX XXBX-XX: Ex II 1G Ex ia IIC T4 Ga (-40°C≤Tamb≤+100°C) Ui≤29.6V, Ii≤100mA, Pi≤0.75W, Ci≤70nF, Li≤0.60uH CML 23ATEX149X/CML 23UKEX1250X Model ST5484E-XXX-XXCX-XX: Ex II 3G Ex ec IIC T4 Gc (-40°C≤Tamb≤+100°C) Ex II 3G Ex ec IIC T6 Gc (-40°C≤Tamb≤+73°C) CML 23ATEX3328X/CML 23UKEX3329X	**EN Standards:** EN 60079-0:2018 EN 60079-1:2014 EN 60079-0:2018 EN 60079-11:2012 EN IEC 60079-0:2018 EN 60079-7:2015+A1:2018	EP : Certified explosion proof, Class I, Groups B,C,D ; Class II, Groups E,F,G « SEAL NOT REQUIRED » Ex ia : Intrinsically Safe for Class I, Groups A,B,C,D when installed as per drawing 9426
UL Approval (North America):	**NRTL Markings:** Model ST5484E-XXX-XX1X-XX: Ex ec IIC T4 or T6 Gc Class I, Zone 2, AEx ec IIC T4 or T6 Gc Class I, Division 2, Groups A, B, C, and D T4 (-40°C≤Tamb≤+100°C) or T6 (-40°C≤Tamb≤+73°C); Type 4X Model ST5484E-XXX-XX2X-XX: Class I, Div 1, Groups B,C,D; Class II, Div 1, Groups E,F,G; T4/T4A (-40°C≤Tamb≤+100°C) or T6 (-40°C≤Tamb≤+73°C); Type 4X Model ST5484E-XXX-XX4X-XX: Ex ia IIC T4 Ga Class I, Zone 0, AEx ia IIC T4 Ga Class I, Division 1, Groups A,B,C, and D T4 Type 4X; -40°C≤Tamb≤+100°C; Vmax=29.6V, Imax=100mA, Vi=70.4nF, Li=0.5uH	**CSA/UL Standards:** CSA C22.2 0-10 CSA C22.2 25-1966 CSA C22.2 30-1986 CSA C22.2 94-M91 CSA C22.2 157-M1992 CSA C22.2 213-1987 CSA C22.2 61010-1-12 CSA C22.2 60079-0:2019 CSA C22.2 60079-7:2016 CSA C22.2 60079-11:2014 UL 61010-1 UL 61010-1-12 UL 50 UL 913 UL 1203 UL 60079-0 UL 60079-7 UL 60079-11 ANSI/ISA-12.12.01-2011	