OVERVIEW

The DATAWATCH IX vibration monitor recording device features a striking graphical VGA display, and four or eight universal inputs for data display and recording. This device is perfect for 4-20mA vibration transmitter inputs.

The 88mm [3.5in] display offers crystal clear visualization of vibration and process parameters with a wide selection of configurable views to best suit the application. Views include: horizontal and vertical trends, horizontal and vertical bar graphs, numeric, alarm panel, and alarm status. The unit also provides user configuration from the front of the product without the need to connect to a PC.

The DATAWATCH IX recording functionality utilizes 50MB onboard Flash memory, removable USB storage and data transfer via Modbus TCP/IP over Ethernet communications. The four or eight universal input channels provide high accuracy 125ms parallel sampling. An additional 30 virtual channels can be utilized to view Modbus inputs, math, counter and totalizer values within the instrument. Each temperature measurement uses one isolated or two adjacent non-isolated channels.

FEATURES AND BENEFITS

- Automatic data recording
- Panel mounted
- 4-20mA universal inputs (perfect for vibration transmitters)
- USB removable data storage facility
- Compact design
- 50MB flash memory
- Modbus TCP/IP over Ethernet communications
- VGA crystal clear display
- 30 virtual channels
- Multiple I/O options
- Web server
- Four isolated channels
- Eight non-isolated channels
- Three isolated relays, or two isolated relays plus two relays with a shared common

SPECIFICATIONS

General

I/O Types Analog Input: Four isolated or Eight non-isolated. Note that temperature takes up one isolated input (Not dual channel).
Digital Input: Two
Digital (Logic) Output: One
Relay Output: Four (Two isolated, Two shared common)
Features:
- Modbus TCP master/slave
- USB configuration save/restore
- 30 Virtual channels (each configurable as counter, math, totalizer or comms input)
- Customized start up screen
- Ethernet/IP

Environmental Performance

Ambient Temperature Range:
Operating: 0 to 55°C
Storage: –20 to +70°C
Humidity Range
Operating: 5% to 85% RH non condensing
Storage: 5% to 85% RH non condensing
Protection:
Front panel: IP65
Behind Panel: IP10 (International)
Shock/Vibration: BS EN61131-2 (5 to 150 Hz. at 1g; 1 octave per min.)
Altitude: <2000 metres
Atmosphere: Not suitable for use in explosive or corrosive atmospheres
Electrical Safety: BS EN61010-1 (Installation category II; Pollution degree 2)
Electromagnetic Compatibility Emissions
(Standard units): BS EN61326 Class B – Light industrial
(Low voltage option): BS EN61326 Class A – Heavy industrial
Immunity: BS EN61326 Industrial

Approvals and Compliance

General: CE and cUL, EN61010
PV input: AMS2750D compliant
RoHS EU: China
Packaging: BS61131-2 section 2.1.3.3.

Physical

Panel Mounting: 1/4 DIN Rail
Weight (Instrument only)**:** 0.44kg (15.52oz)
Panel Cutout Dimension: 92 mm x 92 mm (both-0.0 +0.8) or 3.62 in x 3.62 in (both-0.00 +0.03 in)
Depth Behind Panel: 90 mm (3.54 in) excluding wiring

Operator Interface

Display: 3.5” TFT color display (320 pixels wide x 240 pixels high)
Controls: Four navigation push buttons below the display screen (Page, Scroll, Lower and Raise)

Power Requirements

Supply Voltage:
Standard: 24 Vdc (+20%,-15%). See Power Supply Voltage for packaged systems on page 7.
Power Dissipation: 9W (max.)
Fuse Type: No internal fuse fitted
Interrupt Protection: Standard: Holdup >10ms at 85V RMS supply voltage

Battery Backup

Stored Data: Time, date
Replacement Period: Three years typical
Clock (real-time clock) Data:
Support Time: Minimum of 1 year with unit unpowered
Temperature Stability: 0 to 55°C ≤±3.5ppm
RTC Aging: First year to 10 year <± 5ppm
Type: Poly-carbon mono fluoride/lithium (BR2330) (PA260195)
Replace battery with Panasonic BR2330/BE only. Use of another battery may present a risk of fire or explosion. See owners manual for safety instructions.

Caution Battery may explode if mistreated. Do not recharge, disassemble or dispose of in fire.

Ethernet Communications

Type: 10/100baseT Ethernet (IEEE802.3)
Protocols: Modbus TCP/IP master/slave over Ethernet
Cable type: Category 5
Maximum length: 100m (110 yards)
Termination:
RJ45
Green LED illuminated = link connected;
Amber LED flashing shows link activity

USB Port

Number of Ports: One at rear of instrument
Standard: USB1.1
Transmission Speeds: 1.5MBit/sec (low speed device)
Maximum Current: <100mA
Peripherals Supported: Memory stick (8GB max), Bar code reader, QWERTY keyboard

SPECIFICATIONS Continued

Update/Archive Rates

Sample Rate (input/output): 8Hz
Trend Update: 8Hz max.
Archive Sample Value: Latest value at archive time
Display Value: Latest value at display update time

Analog Input

Number of Inputs: Four or Eight
Input Types: dc Volts, dc mV, dc mA, dual mA (external shunt required), dual mV, Thermocouple, RTD (2-wire and 3-wire), Digital (Contact closure)
Input Type Mix: Freely configurable
Sample Rate:
8Hz (125ms)
4Hz (250ms) if dual input enabled
Conversion Method: 16 bit delta sigma
Input Ranges: See Table 1 and Table 2
Mains Rejection (48 to 62Hz)
Series Mode: > 95dB
Common Mode: >179dB
Common Mode voltage: 250V ac max.
Series Mode Voltage: 280mV at lowest range; 5V p-p at highest range
Input Impedance:
40mV, 80mV, 2V ranges > 100MΩ;
62.5kΩ for input voltages > 5.6V
667kΩ for input ranges < 5.6V
Overvoltage Protection
Continuous: ±30V RMS
Transient (<1ms): ±200V pk-pk between terminals
Sensor Break Detection Type: ac sensor break on each input giving quick response with no associated dc errors
Recognition Time: <3 seconds
Minimum Break Resistance: 40mV, 80mV ranges: 5kΩ; other ranges: 12.5kΩ
Shunt (mA inputs only): 1Ω to 1KΩ mounted externally
Additional Error Due to Shunt: 0.1% of Input
Isolation:
Channel to Channel: 300V RMS or

Note: If Dual Channel mode enabled primary and secondary inputs are not electrically isolated from each other.

Channel to Common Electronics: 300V RMS Channel to Ground: 300V RMS
Dielectric Strength Test: BS EN61010, 1 minute type test
Channel to Channel: 2500V ac
Channel to Ground: 1500V ac

Table 1 (**Note**: Restricted to 2000mV if dual input mode enabled)

Low Range	High Range	Resolution	Max. Error (Instrument at 25°)	Temp. Performance
-40mV	40mV	1.9µV	4.6µV + 0.053% of reading	13ppm of input per °C
-80mV	80mV	3.2µV	7.5µV + 0.052% of reading	
-2V	2V	82µV	420µV + 0.044% of reading	
-3V	3V	500µV	1.5mV + 0.063% of reading	45ppm of input per °C

Resistance Input Ranges

Temperature Scale: ITS90
Types, Ranges and Accuracies: See Table 3
Maximum Source Current: 200µA
Pt100 Figures
Range: 0 to 400Ω (–200 to +850°C)
Resolution: 0.05°C
Calibration Error: ±0.31°C ±0.023% of measurement in °C at 25°C ambient
Temperature Coefficient: ±0.01°C/°C ±25ppm/°C measurement in °C rom 25°C ambient
Measurement Noise: 0.05°C peak-peak with 1.6s input filter
Linearity error: 0.0033% (best fit straight line)
Lead resistance: 0 to 22Ω matched lead resistances
Bulb current: 200µA nominal

Table 2 Ohms (RTD) Input Ranges

Low Range	High Range	Resolution	Max. Error (Instrument at 25°)	Temp. Performance
0Ω	400Ω	20mΩ	120mΩ + 0.023% of reading	25ppm of input per °C

Table 3 RTD Type Details

RTD Type	Overall Range (°C)	Standard	Max. Linearization Error
Cu10	–20 to +400	General Electric Co.	0.02°C
Cu53	–70 to +200	RC21-4-1966	0.01°C
JPT100	–220 to +630	JIS C1604:1989	
Ni100	–60 to + 250	DIN43760:1987	
Ni120	–50 to +170	DIN43760:1987	
Pt100	–200 to + 850	IEC751	
Pt100A	–200 to + 600	Recorders SA	0.09°C

SPECIFICATIONS Continued

Thermocouple Data

Temperature Scale: ITS90
CJC Types: Off, internal, external, remote.
Remote CJC Source: Any input channel
Internal CJC Error: <1°C max., with instrument at 25 °C
Internal CJC Rejection Ratio: 40:1 from 25°C
Upscale/Downscale Drive: High, low or none independently configurable for each channel's sensor break detection
Types, Ranges and Accuracies: See Table 4

Table 4 Thermocouple Types, Ranges and Accuracies

T/C Type	Overall Range (°C)	Standard	Max. Linearization Error
B	0 to +1820	IEC584.1	0 to 400°C = 1.7°C 400 to 1820°C = 0.03°C
C	0 to +2300	Hoskins	0.12°C
D	0 to +2495	Hoskins	0.08°C
E	–270 to +1000	IEC584.1	0.03°C
G2	0 to +2315	Hoskins	0.07°C
J	–210 to +1200	IEC584.1	0.02°C
K	–270 to +1372	IEC584.1	0.04°C
L	–200 to +900	DIN43710:1985 (to IPTS68)	0.02°C
N	–270 to +1300	IEC584.1	0.04°C
R	–50 to +1768	IEC584.1	0.04°C
S	–50 to +1768	IEC584.1	0.04°C
T	–270 to +400	IEC584.1	0.02°C
U	–200 to +600	DIN43710:1985	0.08°C
NiMo/NiCo	–50 to +1410	ASTM E1751-95	0.06°C
Platinel	0 to +1370	Engelhard	0.02°C
Mi/NiMo	0 to +1406	Ipsen	0.14°C
Pt20%Rh/ Pt40%/Rh	0 to +1888	ASTM E1751-95	0.07°C

Relay and Logic I/O
O/P1, O/P2 and O/P3 logic I/O and Relay Specification

Active (current on) Current Sourcing Logic Output (O/P1 or O/P2 only):
Voltage o/p across terminals: +11V min.; +13V max.
Short circuit output current: 6mA min. (steady state); 44mA max. (switch current)

Inactive (current off) Current Sourcing Logic Output (O/P1 or O/P2 only):
Voltage output across terminals: 0V (min.); 300mV (max.)
Output source leakage current into short circuit: 0µA (min.); 100µA (max.)

Active (current on) Contact Closure Sourcing Logic Input (O/P1 only):
Input current Input at 12V: 0mA (min.); 44mA (max.)
Input at 0V: 6mA min. (steady state); 44mA max. (switch current)
Open Circuit Input Voltage: 11V (min.); 13V (max.)
Open Circuit (inactive) Resistance: 500Ω (min.); ∞ (max.)
Closed Circuit (active) Resistance: 0Ω(min.); 150Ω (max.)

Relay Contacts

Contact Switching Power (resistive):
Max. 2A at 230V
Min. 100mA at 12V
Current Through Terminals: 2A

Digital Inputs
Dig InA and Dig InB contact closure logic input

Contact Closure
Short circuit sensing current (source): 5.5mA (min.); 6.5mA (max.)
Open circuit (inactive) resistance: 600Ω (min.); ∞ (max.)
Closed circuit (active) resistance: 0Ω (min.); 300Ω (max.)

REAR TERMINALS

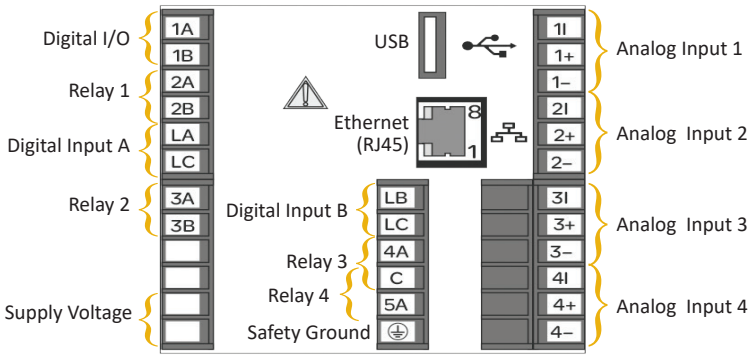

Note: Temperature takes up one analog input (Not dual channel).

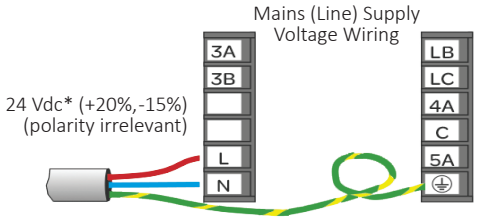

*See packaged systems for other input voltage types (pg 7).

TERMINATION DETAILS

The screw terminals accept wire sizes in the range:
Single wire 0.205 to 2.08mm² (14 to 24 AWG) 2 wires 0.205 to 1.31mm² (16 to 24 AWG) inclusive.
Screw terminals should be tightened to a torque not exceeding 0.4Nm (3.54 lb in).

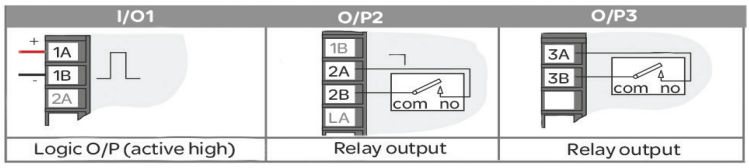

Use copper conductors only.

The power supply input is not fused protected. This should be provided externally.

Each wire connected to LA, LB and LC must be less than 30m in length.

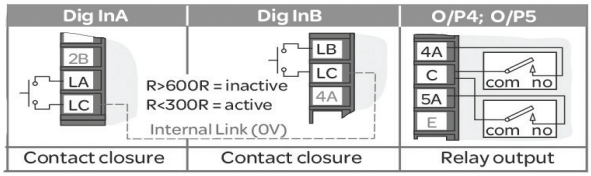

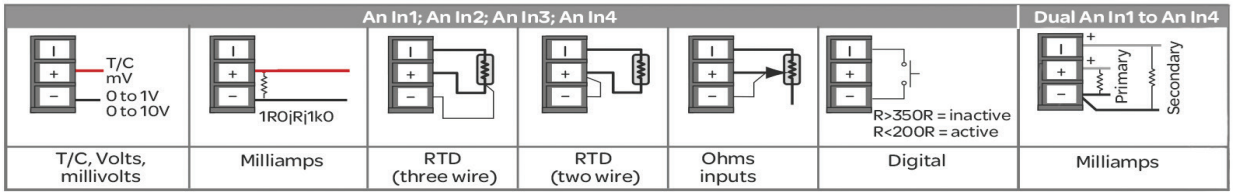

ISOLATION

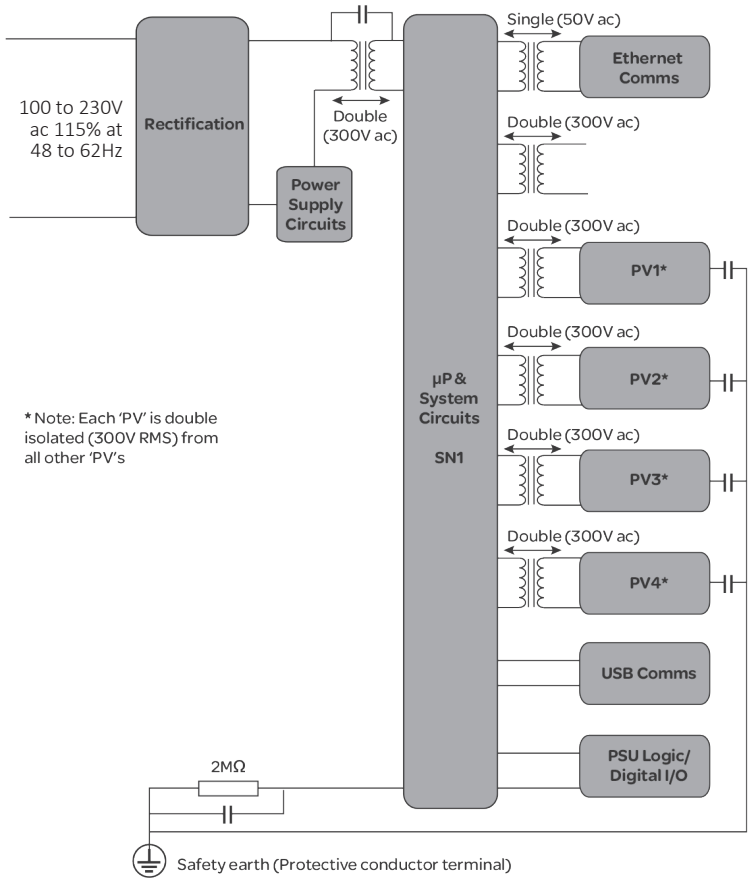

* Note: Each 'PV' is double isolated (300V RMS) from all other 'PV's

INSTALLATION

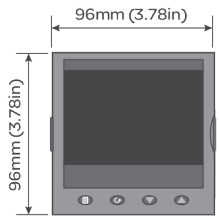

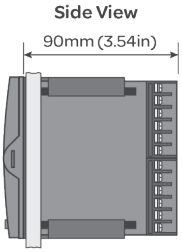

Panel cutout:
92mm (3.62in) x 92mm (3.62in)
(both -0 + 0.8mm (0.03in))

Minimum inter-unit spacing:
Horizontal ('x') = 10mm (0.4in)
Vertical ('y') = 38mm (1.5in)

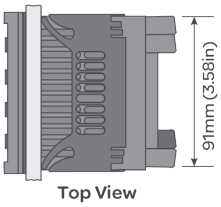

HOW TO ORDER

DW - IX - A A B B

AA	Dual Input Channels
04	4 inputs isolated*
08	8 inputs non isolated*
12	4 inputs isolated & 8 inputs non isolated**
16	16 inputs non isolated**

*BB Options 03-06 only
** BB Options 07-08 only

Enclosure Dimensions for BB 03/04:
8.6 W x 10.6 H x 7.6 D (in)
218.4 W x 269.2 H x 193 D (mm)

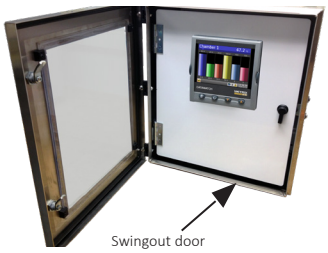

Enclosure Dimensions for BB 05/06:
10 W x 12 H x 8.7 D (in)
255 W x 305 H x 221 D (mm)

Enclosure Dimensions for BB 07/08:
12 W x 14 H x 6 D (in)
305 W x 356 H x 157 D (mm)

BB	Panel Type
03	NEMA 4X wall mount **polycarbonate enclosure** front hinged door complete with wall mounting brackets. Datawatch mounted in the door and wired to a termination assembly complete with 240/120VAC 2 amp circuit breaker. **Front panel mount NEMA 4X USB port. Integral 24V DC power supply wired to power up to eight (8) vibration transmitters and the Datawatch IX monitor.**
04	NEMA 4X wall mount **316 stainless steel enclosure** front hinged door complete with wall mounting brackets. Datawatch mounted in the door and wired to a termination assembly complete with 240/120VAC 2 amp circuit breaker. **Front panel mount NEMA 4X USB port. Integral 24V DC power supply wired to power up to eight (8) vibration transmitters and the Datawatch IX monitor.**
05	NEMA 4X wall mount **polycarbonate enclosure with transparent window** in front hinged door complete with wall mounting brackets. Datawatch is mounted to the **swingout door**, inside the enclosure, and wired to a termination assembly complete with 240/120VAC 2 amp circuit breaker. **The USB port is on the back side of the DATAWATCH IX. Integral 24V DC power supply wired to power up to eight (8) vibration transmitters and the Datawatch IX monitor.[2]**
06	NEMA 4X wall mount **316 stainless steel enclosure with transparent window** in front hinged door complete with wall mounting brackets. Datawatch is mounted to the **swingout door**, inside the enclosure, and wired to a termination assembly complete with 240/120VAC 2 amp circuit breaker. **The USB port is on the back side of the DATAWATCH IX. Integral 24V DC power supply wired to power up to eight (8) vibration transmitters and the Datawatch IX monitor.[2]**
07	NEMA 4X wall mount **polycarbonate enclosure** front hinged door complete with wall mounting brackets. Datawatch mounted in the door and wired to a termination assembly complete with 240/120VAC 2 amp circuit breaker. **Front panel mount NEMA 4X USB port. Integral 24V DC power supply wired to power up to sixteen (16) vibration transmitters and two (2) Datawatch IX monitors.**
08	NEMA 4X wall mount **316 stainless steel enclosure** front hinged door complete with wall mounting brackets. Datawatch mounted in the door and wired to a termination assembly complete with 240/120VAC 2 amp circuit breaker. **Front panel mount NEMA 4X USB port. Integral 24V DC power supply wired to power up to sixteen (16) vibration transmitters and two (2) Datawatch IX monitors.**

NOTES:
1. The DATAWATCH IX systems are factory configured for four (4) isolated or eight (8) non-isolated, 4 to 20 mA vibration transmitters (0 to 1.0 ips (0 to 25 mm/s)) with alarm levels set at 0.3 ips (8 mm/s). Users may reconfigure as required.
2. For Class 1 DIV. 1 and Class 1 DIV. 2 applications use a Purge and Vent System similar to P&F Bebco Purge Panel (P/N: IDDIA-LPS-CI-YZ-RH) and P&F Bebco Purge Vent (P/N: EPV-Z-SA-OO). Use with BB option 05 and 06 only.

Note: Metrix is continuously improving our products. Please refer to our website to download the latest version of this document.