OVERVIEW

5550 and 5550G mechanical vibration switches provide basic, economical vibration protection by means of a simple and highly reliable "over center" snap action mass and spring mechanism. In the presence of sufficient vibration along the switch's sensitive axis, the switch snaps from a stable "untripped" state to a stable "tripped" state, allowing automatic machinery shutdown or alarming when excessive vibration occurs. Once tripped, the switch must be returned to its untripped state via its local reset plunger (5550 only), or via voltage applied to its remote reset coil (standard on 5550G, optional on 5550). A single set of silver-plated SPDT relay contacts are provided as standard for connecting the switch to a machine control or annunciation circuit. An option for DPDT contacts is also available, and for extremely corrosive environments, gold-plated relay contacts may be ordered.

SELECTION CRITERIA

The 5550 and 5550G use identical internal mechanisms, but differ in their housing styles, mounting footprints, hazardous area ratings, and externally accessible features. While the housing used with the 5550G permits its use in the more highly explosive IIC gas group, it is not available with a local reset plunger or with an externally accessible setpoint adjustment screw. The 5550G also occupies a larger mounting footprint. For these reasons, the 5550 is generally the preferred choice except in applications where the IIC gas group is present.

SETPOINT ADJUSTMENT

The switch's trip point can be adjusted between 0 and 16 g's (peak) in increments of approx. 1 g (1/8th turn of setpoint adjustment screw). This adjustment screw is externally accessible on the 5550. On the 5550G, the housing's cover must be removed to access the adjustment screw.

REMOTE RESET/START UP DELAY 1

A remote reset/startup delay feature is standard on the 5550G and optional on the 5550. When the switch's reset terminals are energized, a solenoid is activated. This solenoid will reset the switch (if in its tripped state) and then hold it in this untripped state for approximately 30 seconds*, after which normal operation of the switch resumes. This feature is useful for machines that exhibit higher-than-normal vibration during startup and need to suppress tripping functions until normal operating speeds and conditions have been reached. The holding strength of this solenoid must be properly specified at time of ordering to ensure it can force the switch into an untripped position and hold it there for the duration of the startup delay, even in the presence of high vibration levels (see ordering option C).

Model 5550

Model 5550G

WIRING DIAGRAM

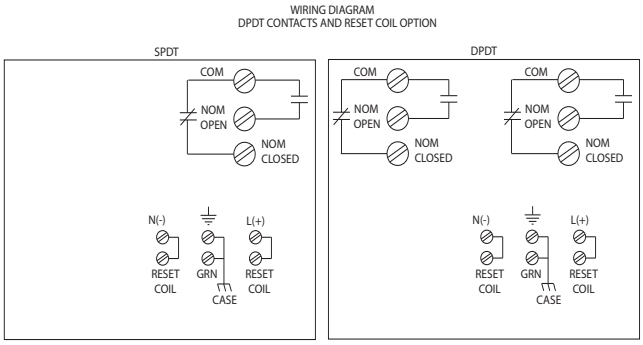

NOTES:
SPDT contacts are standard; DPDT contacts are optional.
Reset coil is standard on 5550G, optional on 5550.

* It is not possible to indefinitely prolong the duration of the startup delay by continuously applying voltage to the reset terminals. The duration is set at the factory for approximately 30 seconds and uses a thermistor circuit. Consult the manual for additional details and recommendations for using both the reset and startup delay features.

NOTE: Mechanical vibration switches rely on inertial forces (acceleration) to actuate the trip mechanism. Consideration should be given to the amount of seismic acceleration that will occur under machinery malfunction conditions and whether it will be sufficient to reliably actuate a mechanical switch. For example, the relationship between acceleration, velocity, and displacement at low frequencies, very large peak-to-peak displacements (in excess of 100mm) are required to generate the acceleration amplitudes (1g or greater) detectable by a mechanical switch. Care should be taken when measuring vibration frequencies below 10 Hz (600 rpm) to understand the levels of structural displacement, velocity, and acceleration that are generated at the frequency(ies) of interest. These should be compared to maximum allowable vibration levels for the machine or structure to determine whether the setpoint adjustment resolution of a mechanical switch will provide suitable results for the application. A Metrix sales professional can review your application and assist with the selection of the proper instrumentation.

SPECIFICATIONS

All specifications are at +25°C (+77°F) unless otherwise noted.

	5550	5550G
Amplitude Range	0 to 16 g pk NOTE: Reset coil holding strength (option C) may limit the usable amplitude range of the switch when the startup delay feature is required.	
Frequency Range	0 – 60 Hz (0 – 3600 rpm)	
Setpoint Adjustment	**Location:** Externally Accessible	**Location:** Internally Accessible (cover must be removed to access)
	Resolution: 1g (approximately 1/8th turn of adjustment screw where one full turn ≈ 8g)	
	Range: 0 – 100% of amplitude range	
Wiring Entries	One (3/4" NPT or M20 x 1.5 – see option E)	Three (3/4" NPT only – see Figure 2)
Local Reset	Manual plunger-style pushbutton on switch housing	Not available (must use remote electrical reset)
Temperature Limit	-40°C to +70°C (-40°F to +158°F)	
Mounting	4-hole rectangular in various dimensional options (see Figure 1 and ordering option E for 5550)	2-hole circular (see Figure 2 and ordering option E for 5550G)
Remote Electrical Reset / Startup Delay	Optional (see ordering option D). Applying a momentary voltage to the reset terminals will reset the switch to its untripped position. Applying a persistent voltage to the reset terminals will suppress the trip mechanism from actuating for the duration of voltage application or 30 seconds, whichever is less (a thermistor circuit limits the maximum delay time).	
Reset Coil Holding Strength	• 2g, 5g, or 10g (see ordering option C). This option dictates the highest g-levels under which remote reset / startup delay capabilities will still operate.	
Enclosure Material	• Copper-free cast aluminum (standard NEMA 4 version) • Copper-free cast aluminum with clear epoxy coating (optional NEMA 4X version)	Cast aluminum with gray epoxy coating
Environment Rating	• NEMA 4 / IP66 (standard) • NEMA 4X / IP66 (optional)	• NEMA 4, 4X / IP66 (standard)
Hazardous Area Rating	Explosion Proof / Flameproof (IIB + H_2) (see ordering option A)	Flameproof (IIC)
Safety Integrity Level (SIL)	Systematic Capability: SC 2 Hardware Safety Integrity: Type A Random Safety Integrity: See SIL 2 certificate (doc #1882265)	
Agency Certifications	ATEX / IECEx / CCC / KOSHA: Ex db IIB + H2 T6 Gb	ATEX / IECEx / CCC: Ex db IIC T6 Gb
	NRTL US/CA: Class I Div 1 Grps B,C,D Class II Div 1 Grps E,F,G	NRTL US/CA: Class I Div 1 Grps A,B,C,D Class I, Zone 1, AEx db IIC Class II Div 1 Grps E,F,G Class III
	INMETRO: Ex db IIB + H2 T6 Gb	
Weight	2.0 kg (4.5 lbs)	1.8 kg (4 lbs)
Contacts	**Type** SPDT (standard) DPDT (optional)	
	Plating Material Silver (standard) Gold (optional)	
	Ratings **Silver-plated** / **Gold-plated** 15A @ 125-480 Vac / 1A @ 125 Vac 1/4 hp @ 250 Vac 1/8 hp @ 125 Vac 0.5A @ 125 Vdc 0.25A @ 250 Vdc	

ORDERING INFORMATION:

5550 Mechanical Switch

5550 Mechanical Vibration Switch 5550- A B C - D E F □□□-□□□	
A	**Hazardous Area Rating[4]**
0	None[4]
1	NRTL US/CA Explosion Proof[1] Class I, Div 1, Groups C,D Class II, Div 1, Groups E,F,G
2	NRTL US/CA Explosion Proof[1] Class I, Div 1, Groups B,C,D Class II, Div 1, Groups E,F,G
3	OBSOLETE, specify A=4 instead[6]
4	ATEX/IECEx/ECAS/NEPSI/CCC/KOSHA Flameproof Ex db IIB+H2 T6 Gb Ex tb IIIC T85°C Db Ta -40°C to +70°C IP66
5	OBSOLETE, same as A=0 but B=3 or 4 for gold contacts
6	OBSOLETE, same as A=1 but B=3 or 4 for gold contacts
7	OBSOLETE, same as A=2 but B=3 or 4 for gold contacts
8	OBSOLETE, specify A=9 instead[6]
9	OBSOLETE, same as A=4 but B=3 or 4 for gold contacts
10	OBSOLETE, specify A=11 instead[6]
11	INMETRO Flameproof, Ex db IIB + H2 T6 Gb Ex tb IIIC T85°C Db Ta -40°C to +70°C IP66
B	**Relay Contacts**
1	SPDT, Silver, 15A
2	DPDT, Silver, 15A
3	SPDT, Gold, 1A
4	DPDT, Gold, 1A
C	**Reset / Startup Delay Coil Holding Strength[5]**
1	5g
2	2g[2]
3	10g
D	**Reset / Startup Delay Coil Voltage**
0	None[4,5]
1	115 Vac
2	230 Vac
3	24 Vdc[2]
4	115 Vdc
E	**Wiring Entry / Mounting Hole Pattern[3]**
1	¾" NPT / Metrix 5173 or 5175
2	¾" NPT / Metrix 5097, VS-2 EX, or 366
3	¾" NPT / Metrix 5078 or 365
4	M20 x 1.5 / Metrix 5097, VS-2 EX, or 366[1]
6	M20 x 1.5 / Metrix 5173 or 5175[1]
7	¾" NPT / Metrix or PMC-BETA 440
8	M20 x 1.5 / Metrix 5078 or 365[1]
F	**Environmental Rating**
0	NEMA 4 / IP66 (-40°C to +70°C), No Coating
1	NEMA 4X / IP66 (-40°C to +70°C), Clear Epoxy
5	NEMA 4X / IP 66 (-40°C to +70°C), Clear Alumite

5550G Mechanical Switch

5550G Mechanical Vibration Switch 5550- A B C - D E F G□□-□92	
A	**Hazardous Area Rating[4]**
G	ATEX / IECEx / CCC Flameproof Ex db IIC T6 Gb (Ta -40°C to +70°C) Ex tb IIIC T85°C Db Ta -40°C to +70°C IP66 EAC Flameproof 1Ex db IIC T6 Gb (Ta -40°C to +70°C) Class I Div 1 Grps A,B,C,D Class I, Zone 1, AEx db IIC Class II Div 1 Grps E,F,G Class III
B	**Relay Contacts**
1	SPDT, Silver, 15A
2	DPDT, Silver, 15A
3	SPDT, Gold, 1A
4	DPDT, Gold, 1A
C	**Reset / Startup Delay Coil Holding Strength**
1	5g
2	2g[2]
3	10g
D	**Reset / Startup Delay Coil Voltage**
1	115 Vac
2	230 Vac
3	24 Vdc[2]
4	115 Vdc
E	**Wiring Entry / Mounting Hole Pattern[7]**
9	¾" NPT (3 places)
F	**Environmental Rating**
2	NEMA 4, 4X / IP66 (-40°C to +70°C), Gray Epoxy

NOTES:

1. NRTL US/CA approvals require tapered threads for conduit and are not compatible with option E=4, E=6, or E=8.
2. When options C=2 and D=3 are simultaneously specified (2g, 24Vdc reset coil), the switch sensitive axis (see Figure 1 for 5550 and Figure 2 for 5550G) MUST be oriented vertically with the cover facing up. This coil lacks sufficient holding strength to support the trip plate when the switch is mounted horizontally or upside down. The switch may be mounted at any orientation for all other options.
3. Consult Figure 1 for mounting plate dimensions corresponding to E options.
4. For SIL approval, add an "S" prefix to the desired Hazardous Area Rating.
5. When D=0 (no reset /startup delay coil), the C option is ignored regardless of which value is selected. All switches ship with a full-scale range of approximately 16gs.
6. Options A=3, A=8, and A=10 were all for Ex d IIB T6 Gb. These are now replaced by the A=4, and A=11, respectively, which reflect the same approvals but with addition of the H2 gas group.
7. Consult Figure 2 for mounting dimensions.

5550 OUTLINE & DIMENSIONS

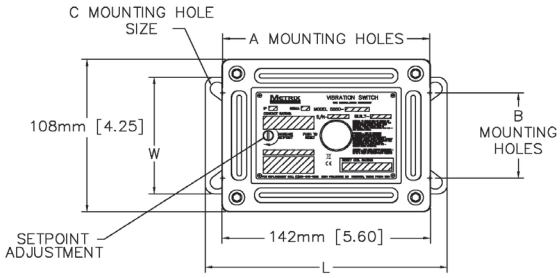

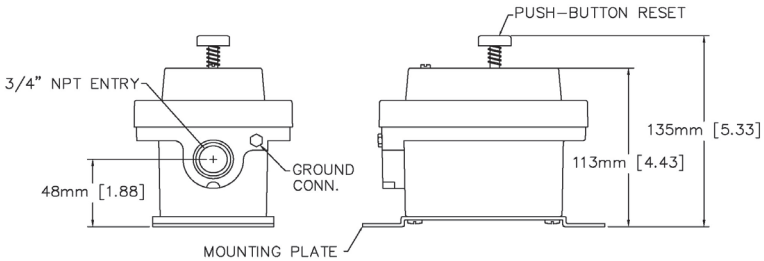

FOOT PRINT TABLE					
Order Option E (See Ordering Information on page 3)	(L)	(W)	(A)	(B)	(C)
E = 1,6	165mm [6.50]	83mm [3.25]	141mm [5.56]	59mm [2.33]	19mm x 9.5mm [.750 x .375]
E = 2,4,5	121mm [4.75]	152mm [6.00]	79mm [3.12]	118mm [4.63]	25.4mm x 9.5mm [1.00 x .375]
E = 3,8	165mm [6.50]	121mm [4.75]	136mm [5.37]	92mm [3.62]	19mm x 9.5mm [.750 x .375]
E=7	114mm [4.50]	127mm [5.00]	71mm [2.80]	108mm [4.25]	19mm x 9.5mm [.750 x .375]

Units: mm [in]
Aprox. Weight: 2.0 kg (4.5 lbs)

Figure 1 – 5550 Mechanical Vibration Switch

5550G OUTLINE & DIMENSIONS

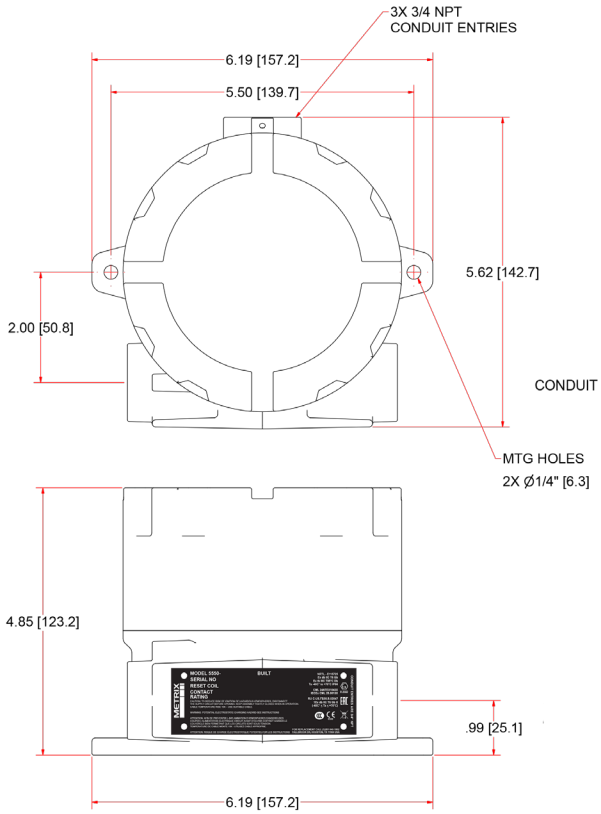

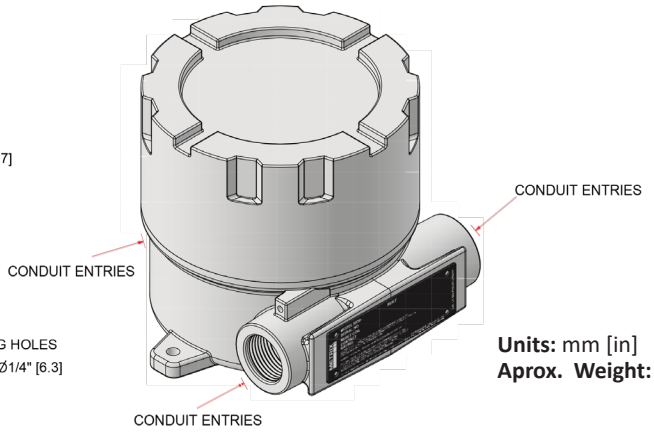

Units: mm [in]
Aprox. Weight: 1.8 kg (4 lbs)

Figure 2 – 5550G Mechanical Vibration Switch

SAFETY INTEGRITY LEVEL

SIL is a method or measurement unit to determine the reliability of electrical, electronic and programmable systems. The purpose of the SIL certification is to measure safety system performance and the likelihood of failure.

Achieving SIL certification, based on the IEC61508 Functional Safety Standard, signifies that the product has been thoroughly assessed and is a reliable electronic device ready to use across a wide range of industries.

Metrix products have been thoroughly evaluated by an independent third party agency on the basis of IEC61508 Functional Safety standards to obtain SIL certification.

Note: Metrix is continuously improving our products. Please refer to our website to download the latest version of this document.

© 2026, Metrix Instrument Company, L.P. All rights reserved.