SW5484E Compact Configurable Vibration Switch

Installation Manual

OVERVIEW

The SW5484E is a loop powered seismic velocity transmitter and configurable switch. The compact vibration switch incorporates a piezoelectric accelerometer, signal integrator, RMS or peak detector, 4-20 mA signal conditioner and a digital microcontroller into a single package. It is mounted directly on a machine case or bearing housing without intervening signal conditioning equipment. The switches can be used in an auto-shutdown or alarm circuit that trips the machine under high vibration conditions. Two independent configurable alarm setpoints and corresponding discrete outputs allow implementation of ALERT (pre-shutdown) and DANGER (shutdown) levels by the machine control system. A separate 4-20 mA proportional velocity output is also provided, allowing connection to PLCs, DCSs, strip chart recorders, or other process monitoring systems where vibration levels can be trended. The unit comes with an 8-Pin M12 Style Connector or bundled flying leads, and includes the dynamic raw acceleration signal provided through two of the 8 pins.

The 8-Pin M12 Style Connector comes with an increased safety rating and can be used with barriers for special installations. For explosion proof installations, wire directly to explosion-proof conduit fittings using the flying lead version with the included elbow.

The SW5484E has no moving parts and is encapsulated in a 316 stainless-steel housing. Each switch is factory calibrated to the sensitivity marked on the label. The setpoint and time delay of the two switch channels can be configured from software.
Refer to Metrix Datasheet 1862019 for specifications, ordering information, and outline dimensions.

Solid State Relays

The solid state relays in the switch can carry a maximum current load of 100mA up to 66°C, decreasing by 1.5mA for each °C above this temperature. If you need a higher current carrying capacity use an interposing relay with a 50 mA holding current like:

idec: RSSDN-10A DC Input Solid State Relay
RSSAN-10A AC Input Solid State Relay
RU2 Series DPDT Universal Relay

8-Pin M12 Connector
(Option D=8)
Increased Safety

Flying Leads
(Option D=7 and 9)
*Explosion Proof

*Explosion Proof Version
Option D=7 and 9

Note: Units sold with an explosion proof rating will include an 8200 explosion proof elbow that will be affixed at the factory.

MOUNTING

It is important to solidly mount the SW5484E body to the machine surface. Refer to section 6 on transducer placement. Different machine preparations are required for the two basic SW5484E mounting styles; NPT (National Pipe Thread) and machine thread (UNF and Metric). Devices with the NPT type mounting stud are secured by the thread engagement and the base of the SW5484E does not contact the machine surface. Devices with the machine thread studs must contact the machine surface. The base of the SW5484E must make square and direct contact. This requires preparing the surface of the machine with a 1 1/2 inch counter bore (surfacing tool). This tool can be used with a portable drill equipped with a magnetic base but care must be taken so that the tapped and threaded hole is perpendicular to the machined surface. The SW5484E must make contact all the way around its base surface. Contact Metrix for more detailed counter bore instructions.

If installing a SW5484E with a standard 1/4 inch NPT stud, drill a hole using a 7/16 inch bit, 5/8-7/8 inch deep. Then tap using a 1/4 - 18 NPT (tapered pipe tap). Hand-tighten the SW5484E and then turn an additional 1 to 2 turns using a wrench on the wrench flats. **Do not use a pipe wrench.** A pipe wrench can apply extreme forces to the body and potentially damage

electronic components. A minimum of five (5) threads of engagement should be made. A 1/4 inch to 1/2 inch NPT bushing is available for mounting the SW5484E in existing 1/2 inch NPT holes. Also, a Metrix model 7084 Flange Adapter can be used between the SW5484E and the machine surface when there is not enough surface thickness to drill and tap a hole. The flange adaptor mounts with three small screws (1/4" X 28).

If installing a SW5484E with one of the straight machined thread sizes, follow standard drill and tap procedures. Do not drill a hole larger that the counter bore pilot diameter before using the counter bore to prepare the machine surface. Drill out the hole with the correct tap drill size after preparing the surface.

The sensitive axis of the SW5484E is in line with the mounting stud. The SW5484E can be oriented in any (0 to 360 degree) position.

WIRING

3.1 General

The SW5484E is connected like other loop powered SW5484Es. The following is a summary based on area designations.

> **CAUTION:** Use of a high-speed torque screwdriver may damage the terminal blocks.

Connect the field wiring in accordance with the appropriate portion of Figure 1.

> **WARNING:** Do not connect active Loop Power to the Dynamic Channel as it will damage the device.

> **WARNING:** Dynamic channel leads MUST NOT be shorted/touch each other while loop power is active as it will damage the device.

The SW5484E requires a minimum of 11 VDC for proper operation. This is the minimum voltage required at the SW5484E (not the power supply), after all other voltage drops across field wiring and receiver input impedance have been accounted for with the maximum 20mA of loop current flowing. The minimum loop power supply voltage required is therefore 11 VDC plus 1 volt for each 50 Ω of total loop resistance.

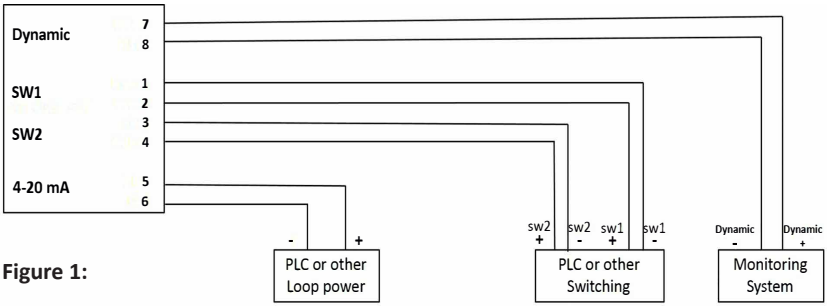

Figure 1:

Example:

Component	Resistance
Signal wiring	10 Ω
DC Input Impedance of receiver	250 Ω
TOTAL LOOP RESISTANCE	**260 Ω**

Minimum supply voltage = 260 Ω (1 V/50 Ω) + 11 V = 16.2 VDC

The maximum loop power supply voltage that may be applied is 30VDC (explosion proof and increased safety). The maximum loop resistance (LR) is calculated by the equation: **LR = 50 (Sv - 11)** Ω, Sv=Supply Voltage
Example: LR = 50 (24 - 11) = 650 Ω for a 24 VDC loop supply.

The maximum raw signal distance from the switch is 10 meters (33 feet). Length longer than this will result in raw signal degradation.

3.2 Explosion-Proof Installation In Hazardous Locations (NRTL)

Some models of SW5484E are NRTL certified explosion-proof, NRTL US/C, Class I, Div 1, Grps B-D and Class II, Div 1, Grps E-G (explosion proof). Connect the field wiring in accordance with the appropriate installation as shown in Figure 1. Refer to section 3.1 for loop voltage and resistance requirements. All conduit and junction boxes used must be certified explosion-proof for the class, division, and group required by the application. Installation of the SW5484E must meet all of the explosion-proof installation requirements of the local governing agency and facility safety procedures. The Metrix part 8200-000 elbow is required to meet this approval.

3.3 Flame-Proof Installation In Hazardous Locations (ATEX, UKEX, IECEX)

Some models of SW5484E are ATEX/UKEX/IECEx certified flame-proof, Ex d IIC T4 Gb. Connect the field wiring in accordance with the appropriate installation as shown in Figure 1. Refer to section 3.1 for loop voltage and resistance requirements. All conduit and junction boxes used must be certified flame-proof for the area required by the application. Installation of the SW5484E must meet all of the flame-proof requirements of the local governing agency and facility safety procedures. The Metrix part 8200-000-IEC elbow is required to meet this approval.

3.4 Software

A. Two independently adjustable setpoints – The use of two setpoints* (one for ALERT and one for SHUTDOWN) is recommended for applications where it is desirable to remotely annunciate an ALERT condition to operators and/or maintenance personnel. This allows appropriate intervention to occur before the machine reaches SHUTDOWN levels. Switches with only a single setpoint are not capable of pre-shutdown warnings unless the 4-20mA output is connected to a PLC or other trending device, and appropriate pre-shutdown alarm limits are programmed in the PLC.

*** NOTE:** The two setpoints are set at the factory at one fourth (1/4) and one half (1/2) of the full scale range, and they can both be adjusted through Metrix software.

B. Relay Operation – The solid state relays of the SW5484E are shipped Normally Open (NO) with a 3 second time delay, which means that when the vibration set point is exceeded three seconds later the relay will shut. If power is removed from the device the relays will remain open. Using the User Software and the Dongle the set points and time delays can be changed. To meet the SIL certification requirements the user must change the relay setting to Normally Closed (NC) using the User Software and the Dongle. NC means that when the SW5484E is energized, or 4-20 mA loop power is provided, the relays are closed. The NC setting is considered "Fail Safe" as the contacts will open on loss of power to the device.

C. Latching Operation - The solid state relays of the SW5484E are shipped Non-Latching, which means that when the vibration set point is exceeded, and the time delay has expired, the relay will change state. If the vibration level goes less than the alarm setpoint, and Non-Latching is selected for the relay, the relay will automatically change to its original state. If either or both relays are set to Latching, which means that when the vibration set point is exceeded, and the time delay has expired, the relay will change state. If the vibration level goes less than the alarm setpoint, and the Latching mode is set, the relay will not change state until 4-20 mA loop power is momentarily removed to reset the Latched alarms. Latching must be selected for each relay in order to meet the SIL requirements.

D. LOCKOUT (Power-Up Alarm Inhibit) capabilities – Configurable LOCKOUT capability is available for suppressing alarm activation during transducer startup conditions.

*** NOTE:** This delay is set at the factory for 10 seconds and can be adjusted in the field by using Metrix software up to 300 seconds.

E. Flexible Discrete Output Types – The solid state relays can be used as discrete outputs to externally annunciate alarm conditions and to use the switch as part of an auto-shutdown (i.e., trip) circuit. Switches provide two discrete outputs – one for ALARM and one for SHUTDOWN. The outputs can be individually field-configured to have separate time delays and separate shelf states (open on alarm or close on alarm). Solid-state relays are designed primarily for applications where the discrete output(s) will be connected to a light load, such as a PLC, DCS or to an interposing relay with a maximum 50mA holding current.

REV	REVISIONS
A	RELEASE

NOTES: (UNLESS OTHERWISE SPECIFIED)

1. **THE MAXIMUM OUTPUT VOLTAGE FROM THE SAFE** AREA APPARATUS MUST NOT EXCEED THE RATED VOLTAGE OF THE TRANSMITTER: 30VDC.
2. **CIRCUIT IN HAZARDOUS AREA MUST BE CAPABLE OF WITHSTANDING** A VOLTAGE TEST OF 500 VRMS TO EARTH.
3. THE INSTALLATION MUST COMPLY WITH THE APPROPRIATE NATIONAL INSTALLATION REQUIREMENTS.

DIVISION 2/ZONE 2 INSTALLATION

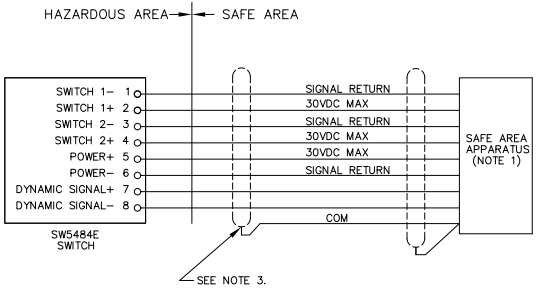

Note: The power may be connected to the SWITCH ports without regard to polarity.

AGENCY APPROVED PRODUCT

DO NOT DEVIATE FROM DOCUMENTED CONSTRUCTION OR LISTED PARTS

Verifie' et Certfie'
conforme a' l'execution

DIVISION 2/ZONE 2 INSTALLATION

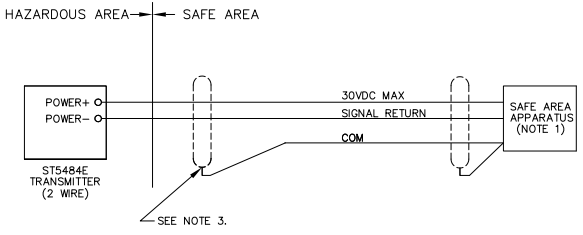

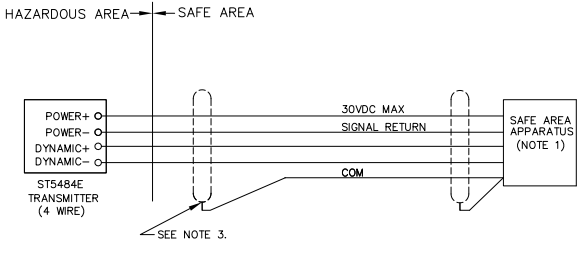

MATERIAL:	UNLESS OTHERWISE SPECIFIED DIMENSIONS ARE IN INCHES. ALL CORNERS BROKEN TO .010 MIN. RADIUS AND TOLERANCES ARE:		APPROVALS	DATE
FINISH:	FRACTIONS: ±1/64 .XX ±.01 .XXX ±.005		DRAWN BY: A. Wilson	06-16-20
THIS DOCUMENT AND ALL INFORMATION HEREON IS THE PROPERTY OF METRIX INSTRUMENT CO. APPROVAL MUST BE OBTAINED BEFORE IT IS REPRODUCED OR INFORMATION HEREON IS ISSUED TO A THIRD PARTY. THIS DOCUMENT MUST BE RETURNED UPON REQUEST.	ANGLES: ±1° SURFACE FINISH 64	ST5484E SW5484E	CHECKED BY:	
		NEXT ASSY USED ON	APPROVED BY:	
		APPLICATION	DO NOT SCALE DRAWING	

METRIX HOUSTON, TEXAS USA

INSTALLATION, ST5484E/SW5484E, INCREASED SAFETY

SIZE	DRAWING NO.	REV.
B	1871697–AGENCY	A

SCALE: 1:1 SHEET: 1 of 1

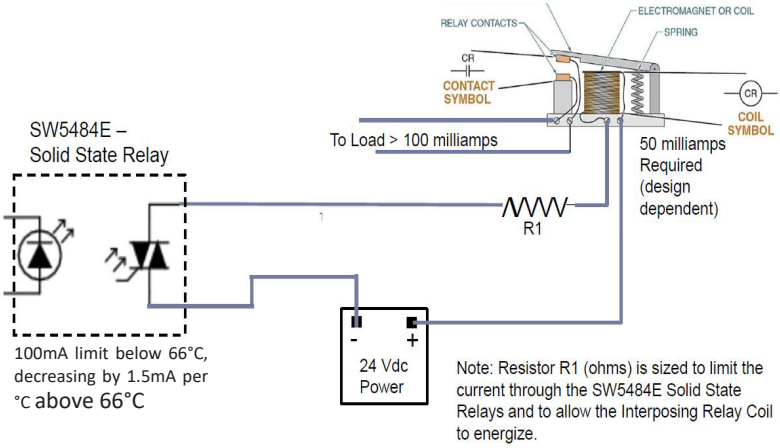

WARNING:
ATEX/UKEX/IECEx Specific conditions of use (Special Conditions) (Ex ec)

The following conditions relate to safe installation and/or use of the equipment.

- Transient protection shall be provided that is set at a level not exceeding 140 % of the peak rated voltage value at the supply terminals to the device.
- The device does not incorporate an external earth facility. It is the responsibility of the user to ensure adequate earth continuity.
- For SW5484E with 8-Pin M12 connector: the mating female connector provided by the end user shall be in accordance with all applicable clauses of EN 60079-0 and EN 60079-7. A minimum degree of protection IP54 according to EN/ 60529 shall be ensured.
  The mating connector shall not be connected or disconnected when energized.
- For SW5484E with permanent cable and separately certified cable gland: according to specific conditions of use of certificates No.

CMP	TRUSEAL TSMe M16x1.5 cable gland	II 2G Ex eb IIC Gb	CML 19ATEX3185X

  The end user shall provide suitable additional clamping of the cable to ensure that pulling is not transmitted to the terminations.
- Ambient Temperature Range:

T4 Temperature Code	T6 Temperature Code
-40 °C to +100 °C	-40 °C to +73 °C

WARNING:
ATEX/UKEX/IECEx Specific conditions of use (Special Conditions) (Ex d)

The following conditions relate to safe installation and/or use of the equipment.

- The final user shall use an Ex d certified entry device at the elbow's entry while respecting the installation requirements of EN 60079-14. For ST5484E transmitters with flying leads, a flameproof entry device with sealing compound (barrier seal) shall be used.
- The equipment does not incorporate an external earth facility. It is the responsibility of the user to ensure adequate earth continuity.
- The disassembling of the device from its conduit capped elbow is not allowed.
- Ambient temperature range:

T4 Temperature Code	T6 Temperature Code
-40 °C to +100 °C	-40 °C to +73 °C

WARNING:
NRTL Equipment Installation Requirement per ordinary locations standards, CSA C22.2/UL 61010-1:

Applicable for permanently connected equipment:

a) A switch or circuit-breaker must be included in the installation;
b) It must be suitably located and easily reached;
c) It must be marked as the disconnecting device for the equipment.

Equipment environmental Ratings:

a) Pollution degree 3
b) Installation category I
c) Altitude 2000m
d) Outdoor: Type 4x
e) Temperature -25°C to 100°C

4. ELECTROMAGNETIC COMPATIBILITY

In order to meet the requirements of electromagnetic compatibility in areas of high electromagnetic interference, the field wiring must be:

- Shielded twisted pair cable enclosed in grounded metallic conduit, or
- Double shielded twisted pair cable with a metallic body cable gland fitting and with the outer shield grounded.

Use standard two-conductor, twisted pair, shielded wiring for the long run to the instrumentation enclosure. The SW5484E is connected like other loop-powered end devices.

NOTE: Metrix also strongly recommends the use of our ferrite bead kit (Metrix p/n 100458) as an extra precaution against electromagnetic interference that may be induced in field wiring from subsequently bleeding into the SW5484E.

When vibration level at SW5484E is…	SW5484E output will be…	PLC (or other) should read…
0.0 in/s (i.e. no vibration)	4.0 mA (± 0.1 mA)	0.00 in/sec
1.0 in/s (i.e. full scale vibration)	20.0 mA (± 0.5 mA)	1.00 in/sec

Momentary "jolts" that can occur at start-up, or during some operating condition changes, do not reflect a machine's steady-state operating condition. To prevent such occurrences from generating nuisance alarms, program a time delay into the alarm such that the indicated vibration level must persist above the alarm setpoint for a preset period of time before an alarm is generated. The indicated vibration level must cross the threshold level and stay above it for a preset time before any alarm action is taken. A 2 to 3 second delay is normally applied to most machinery. Consult Metrix if you have a question about your machine's operating characteristics.

The SW5484E has a start-up time lockout for alarms. A start-up lockout is different than a time delay. A start-up lockout functions the same as a time delay, but is usually set to a much longer time. Both may be needed.

5. CONNECTION TO PLC OR OTHER INDICATING INSTRUMENT

The first step in configuring the PLC, DCS, or other recording instrument is to determine the source of power. The SW5484E requires loop power. Some analog input channels on a PLC or DCS, for example, provide this power from within. If they do not provide power, an external power supply must be provided. Connect the SW5484E field wiring using standard instrumentation practices. Scaling of the display is on the basis of the range of the SW5484E. The measurement parameter name is "vibration" and the units are "in/s" (inches per second) or "mm/s" (millimeters per second). The example below is based on a standard 1.0 in/s SW5484E.

6. TYPICAL DEVICE PLACEMENT

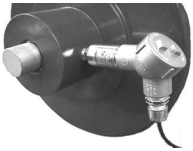

Figure 2: Typical SW5484E mounting

The SW5484E measures seismic vibration (i.e., vibration velocity) at the attachment point on the machine, using engineering units of in/s (inches per second) or mm/s (millimeters per second) depending on the selected ordering option. The devices's sensitive direction is through the long axis of its cylindrical body. It will not measure side-to-side motion. Typical SW5484E mounting for casing vibration measurements is in the horizontal direction at the bearing housings as depicted in Figure 2. The horizontal direction usually incurs more vibration because most machines' foundation constrains vertical vibration more than horizontal vibration. A horizontal mounting arrangement is also depicted in Figure 3, but with additional detail showing typical accessories. When flying leads are ordered, a 5 meter or 10 meter length may be specified

NOTE: Hazardous area locations do not allow a splice at the location shown in Figure 3. Instead, the splice must be made in a second conduit hub (meeting splicing requirements) located at the end of flexible conduit.

When attaching conduit to the SW5484E, observe the following:

- Because the SW5484E is sensitive to vibration, avoid unsupported lengths of conduit and excessive mass (such as large hubs or junctions) hanging directly off the end of the SW5484E. These can introduce unwanted vibrations that do not reflect actual machinery vibration and cause mechanical stresses that can lead to premature transducer failure.
- A "Y" type conduit elbow, such as the Metrix 8200 series, is preferred because it prevents the conduit from extending too far away from the SW5484E, thus limiting the likelihood of breakage. It also precludes long unsupported lengths of conduit directly aligned with the devices bore (longitudinal axis) as noted in the bullet above.
- Avoid attachment of rigid conduit directly to the SW5484E; instead, use a small length of flexible conduit to mechanically isolate the SW5484E from vibration that might occur in rigid conduit.
- If a 1-inch to 3/4-inch reducer is used at the elbow, a smaller diameter flexible conduit can be used.

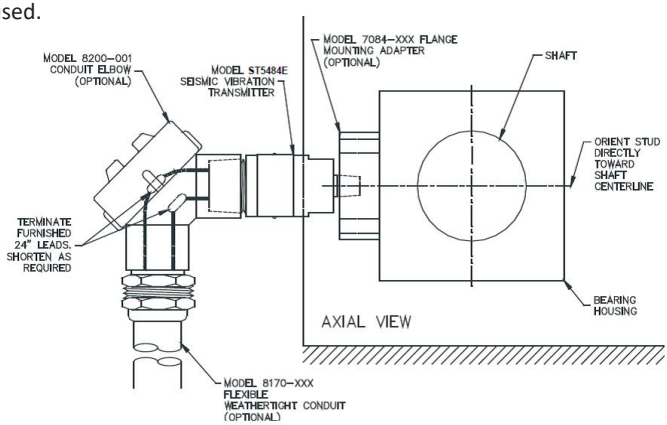

Figure 3

using ordering option D on the Metrix product datasheet 1862019. These leads may be cut to length and then spliced to field wiring as shown in Figure 3.

7. CALIBRATION

The SW5484E has been factory calibrated for the full-scale vibration level marked on the label. If the calibration is in doubt, the unit can be verified in the field by following the procedures outlined below. Note that there are no Zero and Span adjustments on the SW5484E. Additionally, the SW5484E uses a true RMS amplitude detection circuit; units supplied with a full scale range in peak units scale the underlying RMS measurement by a factor of 1.414 to provide a “derived peak” rather than true peak measurement.

7.1 Zero Verification

In the absence of vibration the output current should be 4 mA ± 0.1 mA. If the ambient vibration exceeds 2% of full scale, the SW5484E should be removed from the machine and placed on a vibration free surface for this measurement. Often a piece of foam can be used to isolate the SW5484E from external motion.

7.2 Span Verification

Subject the SW5484E to a known vibration within the full scale range marked on the label. If you are using a portable vibration shaker where it can be tested at full scale, the output should be 20 mA ± 0.5 mA.

8. DYNAMIC OUTPUT

The SW5484E includes the dynamic output is an acceleration signal with a sensitivity of 100 mV/g, filtered to the same frequency band as used for the 4-20mA velocity measurement.

Observe the following when using this output:

- Only an electrically-isolated or battery-powered portable vibration analyzer should be used when connecting to this output. Since this is a loop-powered device, an external ground will affect the loop output and could cause a false alarm.
- When using a portable vibration analyzer or data collector, be sure to turn the instrument sensor power off.
- Most portable vibration analyzers have a low input impedance and they will load this signal, resulting in attenuation of as much as 20% to 30%. Refer to Table 1 which shows the nominal attenuation expected for a given input impedance.
- In all cases for all locations, the use of this signal is for temporary connection only. Permanent connection could violate hazardous location installation requirements.
- Avoid impacting the SW5484E or introducing other mechanical vibrations when connecting to this output. Such vibration could result in spurious alarms or machinery trips.
- When output is not in use, be sure leads cannot touch conduit or each other as this will affect the 4-20 mA current output.
- Avoid introducing electrical noise when using this output. Do not use this output with leads longer than 10m (33 feet). Use of longer leads can introduce electrical noise and attenuate high-frequency signal content that may be present in the raw acceleration signal.

Connect In Type	Color Code	Dynamic Signal Connections
M12 8-Wire	Brown Brown/White Blue Blue/White Orange Orange/White Green Green/White	1 = Switch 1 - 2 = Switch 1 + 3 = Switch 2 - 4 = Switch 2 + 5 = Power + 6 = Power - 7 = Dynamic Signal + 8 = Dynamic Signal -

Table 1

Input Impedance of Analyzer	dB Attenuation
10 MEG	0.01
5 MEG	0.02
2 MEG	0.04
1 MEG	0.09
500 K	0.18
200 K	0.43
100 K	0.84
50 K	1.61
20 K	3.57
10 K	6.10

9. SPECIFICATIONS, ORDERING INFORMATION AND OUTLINE DIMENSIONAL DIAGRAMS

Refer to Metrix product datasheet 1862019 for additional information.

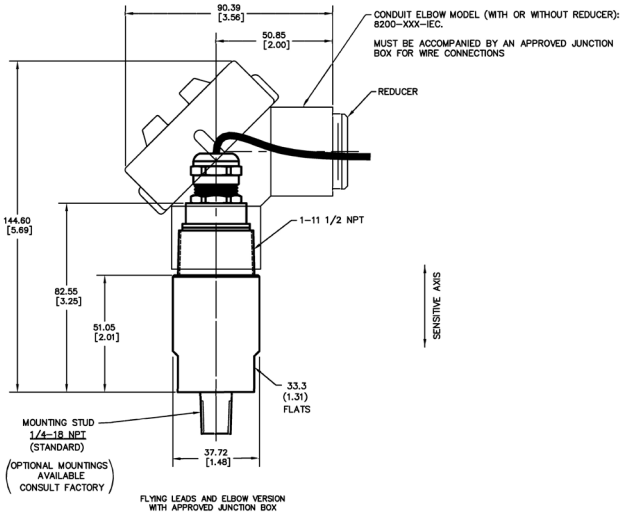

Figure 4:

Figure 4: Outline dimensions of the SW5484E Flying Lead Version. Dimensions in mm [inches]. 8200-000 IEC conduit elbow shown installed, necessary for Explosion Proof rating.

* NOTE: 8200-000-IEC elbow is mandatory for ATEX/UKEX/IECEx/INMETRO/KOSHA/EAC Ex d (flameproof) approved installations. The 8200-000 elbow is mandatory for NRTL Ex d (flame-proof) approved installations.

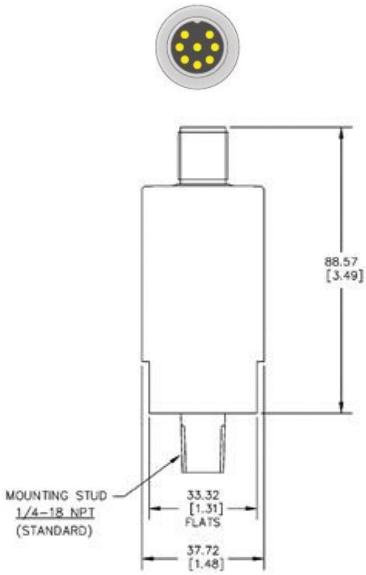

Figure 5:

Figure 5: Outline dimensions of the
SW5484E-XXX-XX8-XX (M12-Style Connector). Dimensions in mm [inches].

10. HAZARDOUS AREA APPROVALS

MODEL SW5484E			
IECEx Approval (World):	**IEC Markings:** Model SW5484E-XXX-XX8X-XX: Ex db IIC T4 Gb (-40°C≤Tamb≤+100°C) Ex db IIC T6 Gb (-40°C≤Tamb≤+73°C) IECEx CML 23.0096X Model SW5484E-XXX-XXDX-X: Ex ec IIC T4 Gc (-40°C≤Tamb≤+100°C) Ex ec IIC T6 Gc (-40°C≤Tamb≤+73°C) IECEx CML 23.0096X	**IEC Standards:** IEC 60079-0:2017 IEC 600079-1:2014 IEC 60079-0:2017 IEC 600079-7:2017	**WARNING:** DO NOT OPEN WHEN ENERGIZED **ATTENTION:** NE PAS OUVRIR QUAND ÉNERGISÉ
ATEX/UKCA Approval (Europe/UK):	**ATEX/UKCA Markings:** Model SW5484E-XXX-XX8X-XX: Ex II 2G Ex db IIC T4 Gb (-40°C≤Tamb≤+100°C) Ex II 2G Ex db IIC T6 Gb (-40°C≤Tamb≤+73°C) CML 23ATEX149X/CML 23UKEX1250X CE 0598 UKCA 1180 Model SW5484E-XXX-XXCX-XX: Ex II 3G Ex ec IIC T4 Gc (-40°C≤Tamb≤+100°C) Ex II 3G Ex ec IIC T6 Gc (-40°C≤Tamb≤+73°C) CML 23ATEX149X/CML 23UKEX1250X CE UKCA 1180	**EN Standards:** EN 60079-0:2018 EN 60079-1:2014 EN IEC 60079-0:2018 EN 60079-7:2015+A1:2018	EP : Certified explosion proof, Class I, Groups B,C,D ; Class II, Groups E,F,G « SEAL NOT REQUIRED » Ex ia : Intrinsically Safe for Class I, Groups A,B,C,D when installed as per drawing 9426
UL Approval (North America):	**NRTL Markings:** Model SW5484E-XXX-XX1X-XX: Ex ec IIC T4 or T6 Gc Class I, Zone 2, AEx ec IIC T4 or T6 Gc Class I, Division 2, Groups A, B, C, and D T4 (-40°C≤Tamb≤+100°C) or T6 (-40°C≤Tamb≤+73°C); Type 4X Model SW5484E-XXX-XX2X-XX: Class I, Div 1, Groups B,C,D; Class II, Div 1, Groups E,F,G; T4/T4A (-40°C≤Tamb≤+100°C) or T6 (-40°C≤Tamb≤+73°C); Type 4X	**CSA/UL Standards:** CSA C22.2 0-10 CSA C22.2 25-1966 CSA C22.2 30-1986 CSA C22.2 94-M91 CSA C22.2 157-M1992 CSA C22.2 213-1987 CSA C22.2 61010-1-12 CSA C22.2 60079-0:2019 CSA C22.2 60079-7:2016 UL 61010-1 UL 61010-1-12 UL 50 UL 913 UL 1203 UL 60079-0 UL 60079-7 ANSI/ISA-12.12.01-2011	

11. ENVIRONMENTAL INFORMATION

This electronic equipment was manufactured according to high quality standards to ensure safe and reliable operation when used as intended. Due to its nature, this equipment may contain small quantities of substances known to be hazardous to the environment or to human health if released into the environment. For this reason, Waste Electrical and Electronic Equipment (commonly known as WEEE) should never be disposed of in the public waste stream. The “Crossed-Out Waste Bin” label affixed to this product is a reminder to dispose of this product in accordance with local WEEE regulations. If you have questions about the disposal process, please contact Metrix Customer Service.

info@metrixvibration.com • metrixvibration.com
8824 Fallbrook Dr. Houston, TX 77064, USA • Tel: 1.281.940.1802